PROJECTA

INTELLI-GRID 48V 4000W

# HIGH POWERED MANAGEMENT WITH BLUETOOTH MONITOR

P/No INVCHR4-BDJ,IGBRDJ-48

# WARNING

- High Voltages inside
- The appliance is not to be used by persons (including children) with reduced physical, sensory or mental capabilities, or lack of experience and knowledge, unless they have been given supervision or instruction.
- Children being supervised are not to play with the appliance.
- This device can only charge 48V Lithium batteries from 35~700Ah
- When charging batteries, the batteries must be placed in well-ventilated area when charging.
- This device is not intended to charge non-rechargeable batteries.

**There is no serviceable part inside the screen**

- Opening the screen will void the warranty of the product.
- The screen contains lithium coin/button battery which is not serviceable and does not need to be replaced during the whole life of the product.
- This product is considered as “lower risk" regarding the dangers of the internally fitted button battery.

**Please ensure the coin battery is kept OUT OF REACH OF CHILDREN.**

- This includes both new and used batteries.
- Hazardous if swallowed.
- Swallowing can lead to chemical burns, perforation of soft tissue and death.
- Severe burns can occur within 2 hours, if swallowed or placed inside any part of the body.
- **SEEK MEDICAL ATTENTION IMMEDIATELY**, if it is suspected the battery has been swallowed or placed inside any part of the body.

**If you suspect your child has ingested a button battery:**

- If your child is having any difficulty breathing, call 000 immediately.
- Contact the Poisons Information Centre on 13 11 26 and you will be directed to the nearest hospital or emergency service that can manage the injury.
- **Prompt action is critical.** Do not wait for symptoms to develop.
- Do not let the child eat or drink until an X-ray is taken.
- Do not induce vomiting.

**Safe disposal of coin or button batteries:**

Dispose of used batteries properly by putting tape around both sides of the battery, securing them out of reach of children, and taking them to your nearest recycling facility.

**Cyber Security Compliance Information**

This product contains Bluetooth® functionality that connects with mobile phones or other smart devices.

To view the “Statement of Compliance” with the **Cyber Security (Security Standards for Smart Devices) Rules 2025**, scan the QR code below:

## SYSTEM INTRODUCTION

The Intelli-Grid 48V system is a 4000W power solution for all your power, lighting and water requirements. This system monitors the status of the tyres and the level of the RV while also tracking the gas cylinders. It is connected to a colour display with Bluetooth, so you can check and control the system from your phone.

## SYSTEM COMPONENTS

- 7” Monitor with App Connectivity(or optional 10” Monitor)
- All in one 4KW inverter/charger,with 1.5KW MPPT,1.5KW DCDC, 3.3KW AC Charging, Bi-direction converter 12~48V
- 18 outputs master control module, Water Tank Measurement, Bluetooth class 2, include TPMS, Leveling Sensor
- 105Ah/51.2V (48V) Lithium Battery
- Wireless switches (Optional)
- Up to 4 water tank sensors

## INVCHR4-BDJ – FRONT: 650 x 357 x 175mm

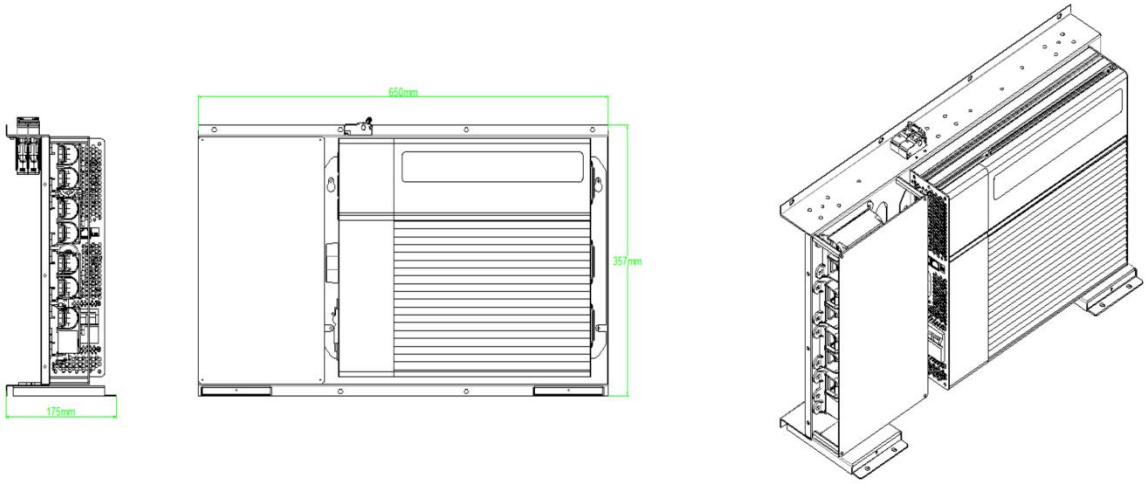

INVCHR4-BDJ – BACK

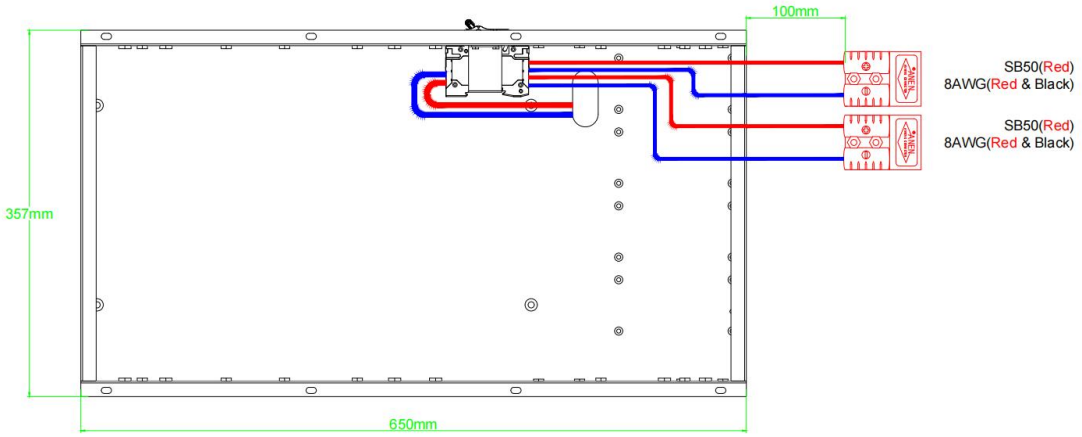


IGBRDJ-48 – Size: 400 x 370 x 168.5mm

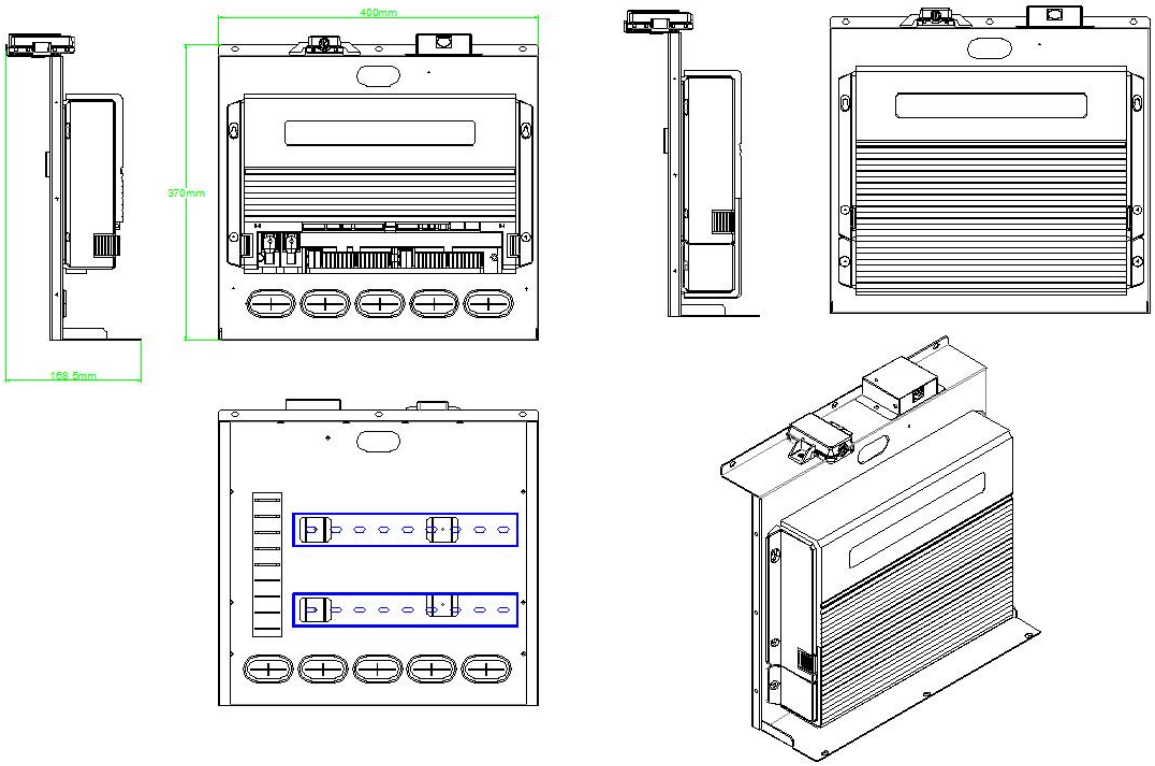

# KEY FEATURES

**INVERTER & GRID POWER**

4000W Inverter/Charger with 70Amp charging(3.3kW), grid power booster and AC transfer switch.

**LITHIUM BATTERY**

An advanced and powerful 105Ah lithium battery perfectly matched to the Intelli-Grid 48V system provides the ultimate power for off-grid requirements.

**BLUETOOTH MONITOR**

Bluetooth 7” colour monitor showing SOC, full control of the RV, water level, lighting, hardware and a suite of statistical information for SOLAR, BATTERY and LOADS.

**MULTIPLE CHARGING OPTIONS**

30A(1.5kW) DC-DC charging and 30A(1.5kW) MPPT solar charging for charging from vehicle or when sun is shining.

**SOLAR CHARGE WAKE UP**

When this feature is enabled, the system can wake up and be solar charged automatically as long as the sun is shining even when the system is OFF.

**LOW VOLTAGE PROTECTION**

Multiple strategies for low voltage protection of service batteries to avoid failure of lithium batteries by over-discharge.

# Intelli-Grid 48V System

1. The INTELLI-Grid 48V system is ordered in the following parts

A. All In One Inverter/Charger

P/n:INVCHR4-BDJ

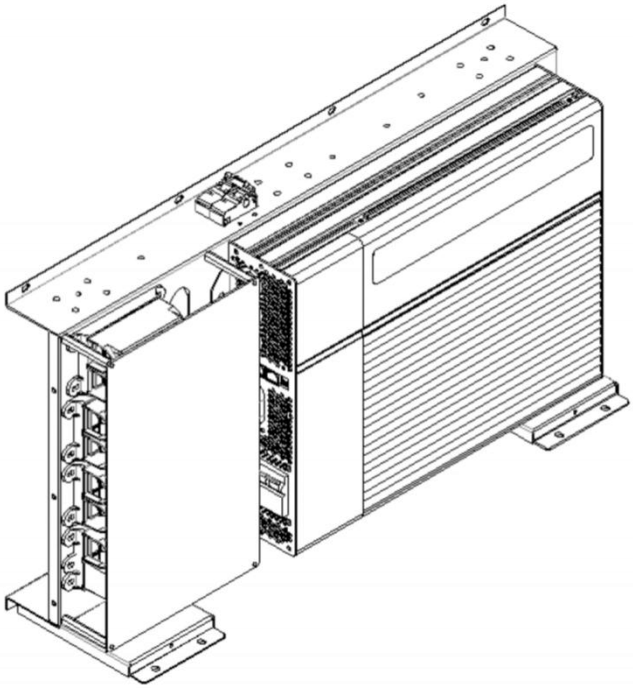

B. 18 Outputs Master Control Module
P/n:IGBRDJ-48

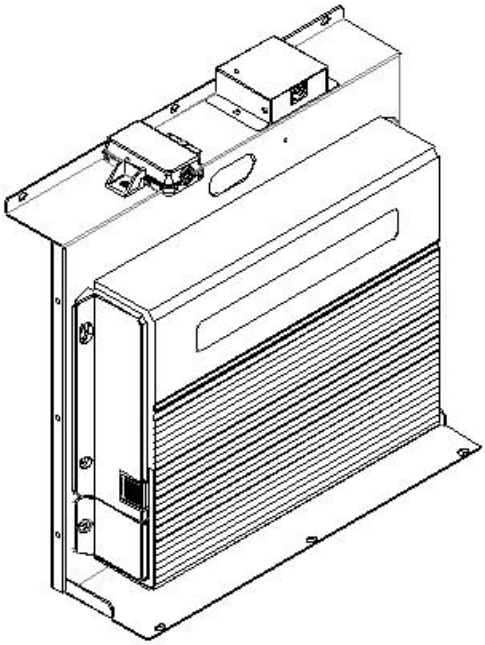

C. 5kWhr(48V 105Ah)Battery
P/n:LB105-48HDCJ

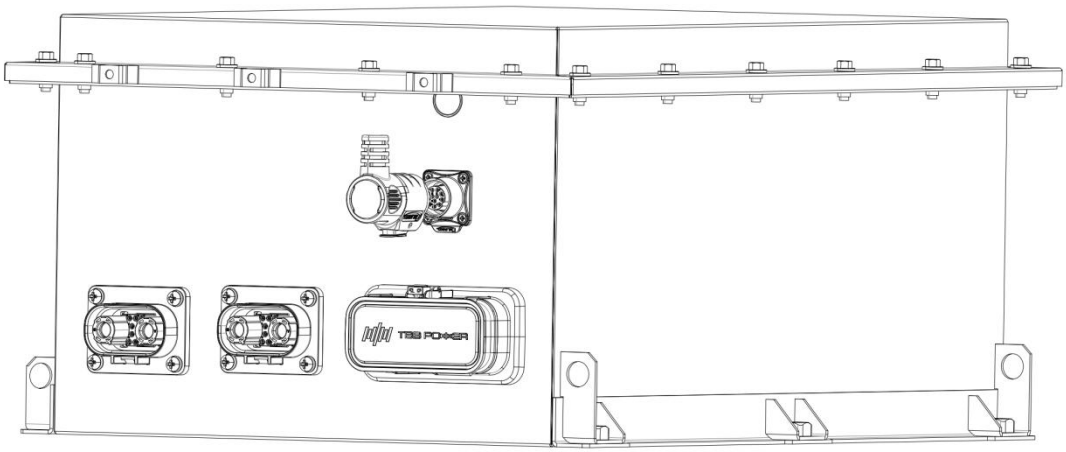


D. 7” Colour display with 10m lead.
P/n:IGD-BT7J-48

E. Cables to Suit above
P/n:LB1CBLJ-48

F. Remote Battery Switch
P/n: LBSW-10

2. Mount the Battery, Inverter/ Charger, the Master Control Module into place,
7” Display and the remote battery switch.

a. Ensure the battery is not further than 3 meter from the

i. Inverter / Charger

ii. Master Control Module

3. Wire up the Inverter;

a. Bolt the Orange 50mm² cable to the inverter post inside the cover labelled BAT+ (Should be already installed).

b. Bolt the Black 50mm² cable to the inverter post inside the cover labelled BAT- (Should be already installed).

c. Bolt the Red 50mm² cable to the inverter post inside the cover labelled ALT+ (Should be already installed).

d. Bolt the Black 50mm² cable to the inverter post inside the cover labelled BAT- (Should be already installed).

e. Use the Red 10mm² cable to the inverter post inside the cover labelled PV+ (Should be already installed).

f. Use the Black 10mm² cable to the inverter post inside the cover labelled PV- (Should be already installed).

g. Connect the Signal Cable from the IGBRDJ-48 board to the inverter port labelled COM port.

f. Wire 240VAC mains power input and output from the Inverter/Charger to the installation (Caravan, Shack, Motorhome etc.). Please consult an electrician for 240V AC wiring.

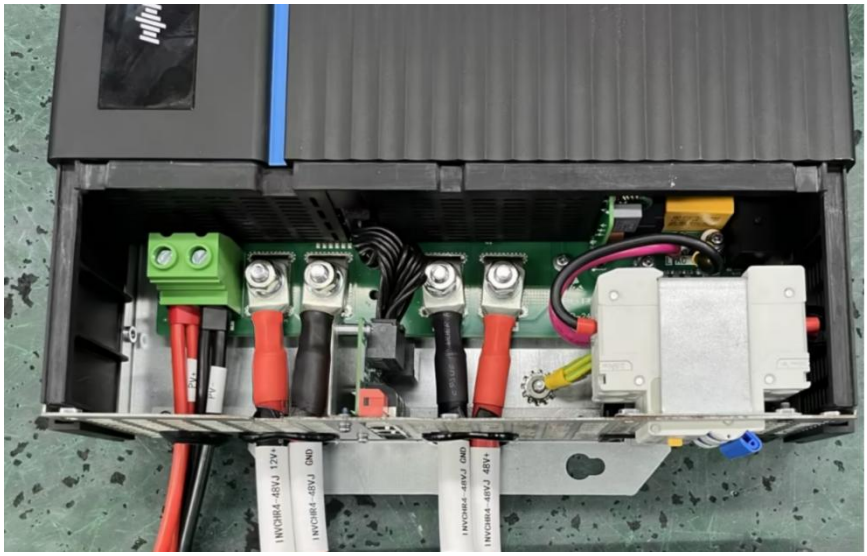


4. Wire up the battery

a. Orange battery cable from the INVCHR4-BDJ board BAT+ connect to the Link In(Positive terminal) of the battery.

b. Black battery cable from the INVCHR4-BDJ board BAT- connect to the Link Out(Negative terminal) of the battery.

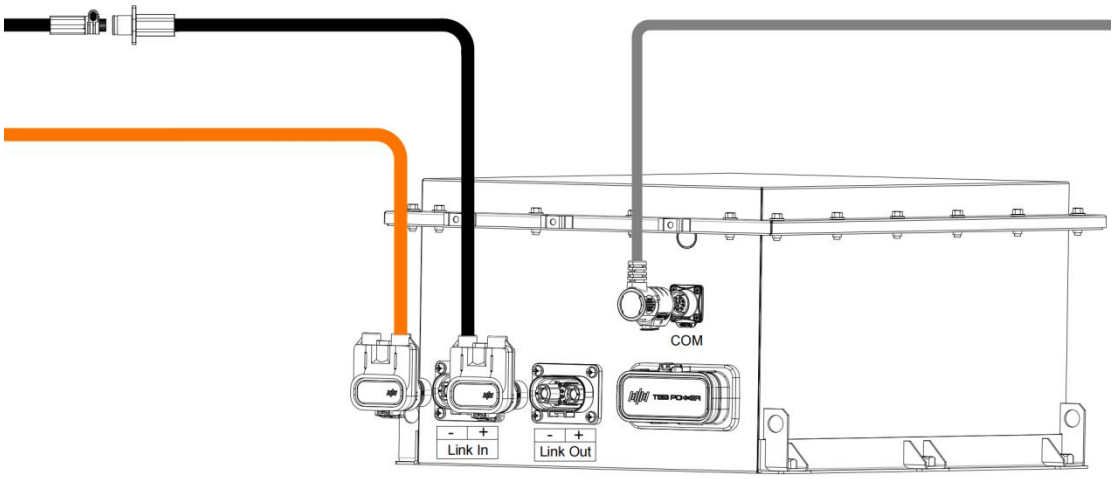


LB105-48HDCJ

c. Connect the battery communication cable to the COM of the battery.
d. Connect the Remote battery switch cable from the battery communication cables port labelled Remote battery switch.
e. Connect the IGBRDJ-48 communication cable labelled BAT to the battery communication cables port labelled CAN.
f. Connect the COM cable (labelled INV COM) between IGBRDJ-48 and INVCHR4-BDJ.
g. Connect the 48V power cable (labelled 48V Bat) between IGBRDJ-48 and INVCHR4-BDJ.

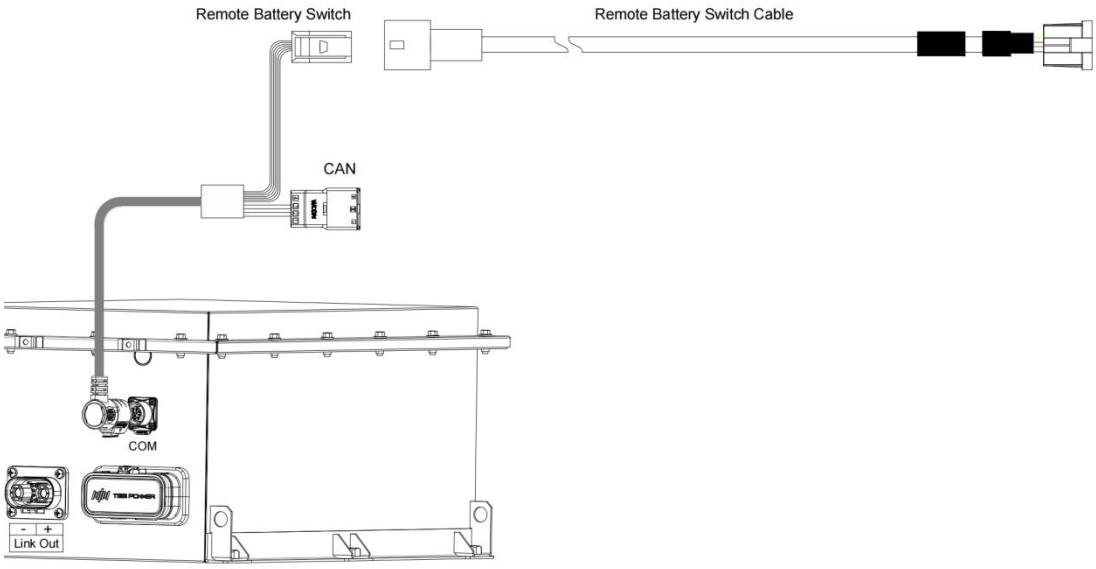


5. Connect the Display cable to the 7” display and connect to the IGBRDJ-48 board cable labelled IGD-BT7J-48 monitor.
6. Connect the solar panels via a fuse to the Red 50Amp Anderson connector for the INVCHR4-BDJ.
7. Connect the Alternator with suitable Cable to the Grey 50Amp Anderson connector for

the INVCHR4-BDJ.
8. Connect the IGBRDJ-48 board to the Grey 175Amp Anderson connector for the INVCHR4-BDJ.
9. Connect the battery power cable to the Blue 120Amp Anderson connector for the INVCHR4-BDJ.
10. Connect water tank sensors.
11. Mount Outside temperature sensor cable up to 3meters long.
12. Turn on the system by:Turn on the remote battery switch.
The INTELLI-Grid system should be on at this stage.

## MONITORING THE 7” COLOUR DISPLAY INTRODUCTION

Home Page

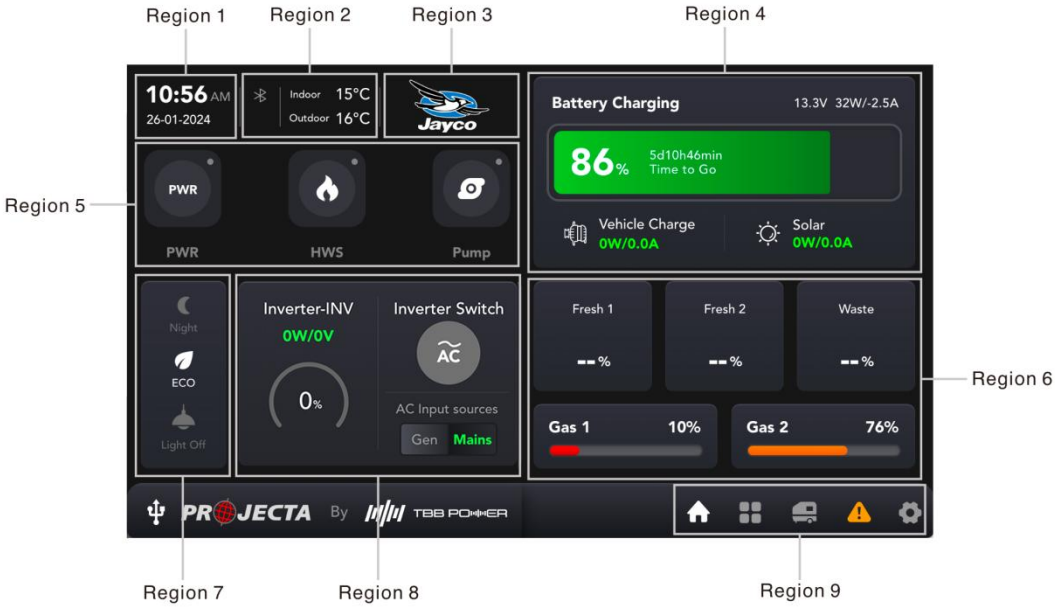


The above is the home page, the details are as follows:
1) Region 1: Area for time and date display.
2) Region 2: Indoor/Outdoor temperature and Bluetooth connection status display area.
    a) The blue Bluetooth icon indicates that the mobile app is connected
3) Region 3: Area for showing customer customized icons.
4) Region 4: Area for showing battery/Vehicle Charge/MPPT Charge information.
In this area, the user can see the battery power/Vehicle Charger/MPPT Charger data and status. It contains the following points:
    a) Check the batteries are charging or discharging.
    b) Check the batteries voltage and current.
    c) Check the batteries SOC value.
    d) Check the time to go or time to full of batteries.
    e) Check the Vehicle Charger are charging or discharging.
    f) Check the Vehicle charging power and current.
    g) Check the MPPT Charger are charging or discharging.

h) Check the MPPT charging power and current.

5) Region 5: Area of shortcut keys.

a) PWR: All DC and AC outputs turned on/off with this key. Only the constant live output of IGCMD18 are retained.

b) HWS: Water heater ON/OFF switch.

c) Pump: Water pump ON/OFF switch.

6) Region 6: Water tank level and Gas display area.

a) If the fresh water is lower than the warning value, the alarm is triggered.

b) If the gray or black water is greater than the warning value, the alarm is triggered.

c) Gas level display.

7) Region 7: Scene mode.

a) ECO mode: System will enter “ECO” Mode automatically after being started. When SOC drops to 15% (it is settable within 10% - 30%), the system shuts down the inverter outputs and the loads with ECO mode enabled, keeping ONLY the load that has not enabled ECO mode loads on.When SOC is back to 20% (or other setting value) + 3% or there is AC grid charging, system exits ECO mode automatically. Customer can also exit the mode manually

b) Night mode: Designed for a silent environment for customers. It can be activated at the front page of 7” screen. When entering the mode,

i. The system will shut down the lights and the back lights of the screens.

ii. De-rate the charging current of inverter/charger to reduce the fan noise.

c) Light off: This mode is designed for turning off the all lights with one key.

8) Region 8: Inverter/Charger display area.

In this area, the user can check the charging data as follows:

i. Display output voltage, power and load rate.

ii. The user can select the AC input source.

“Mains” means the source is grid, “Gen” means it is generator.

iii.Inverter charger ON/OFF switch

9) Region 9: Navigation area.

Note:

a) The icon will turn white when switched to the corresponding page.

b) When the alarm icon is red, it means that one or more alarms exist. After the alarm is removed, the icon turns to gray

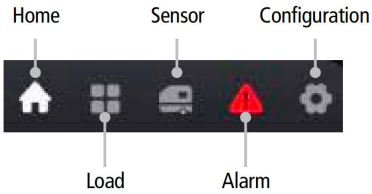

## Load Control Page

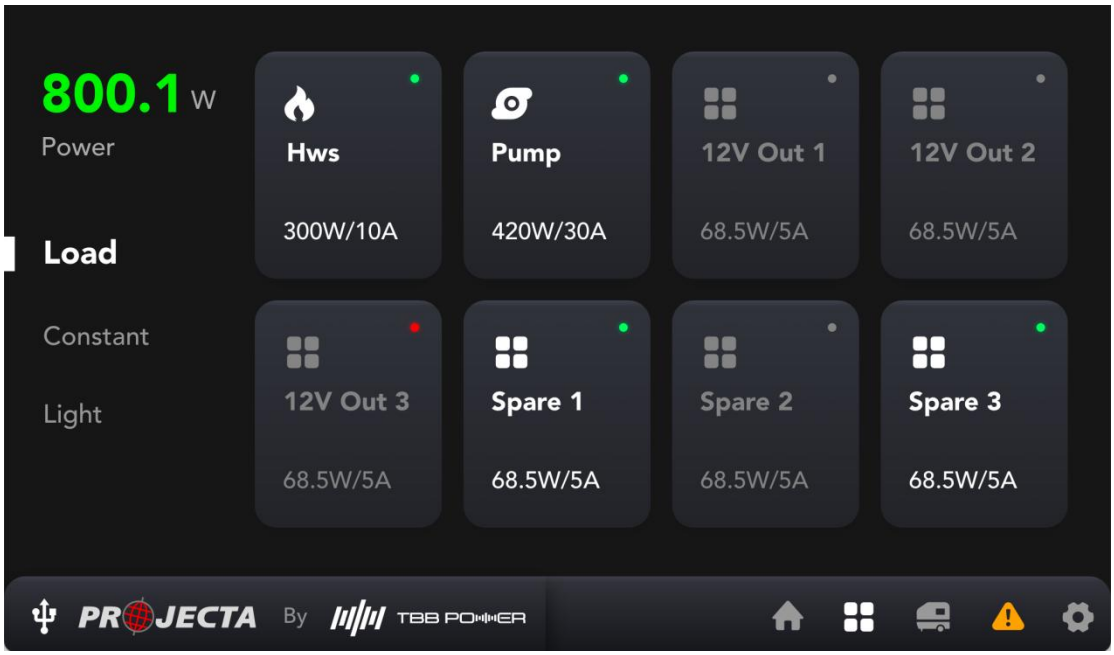


a) The load control page displays switchable outputs(except for lighting load) with their functions named. When the load is turned on, the load icon is white with a green dot in the upper right corner. If the load is turned off, the icon turns gray and the green dot disappears.

b) Each load area will display the current channel power consumption and current in real-time

c) When the load channel triggers faults such as over current/short circuit, the green dot will turn into a red dot. Please check the load and wiring harness at this time, and only restart after troubleshooting

d) The real-time total power consumption of all channels is displayed in the upper left corner of the page

## Constant Page

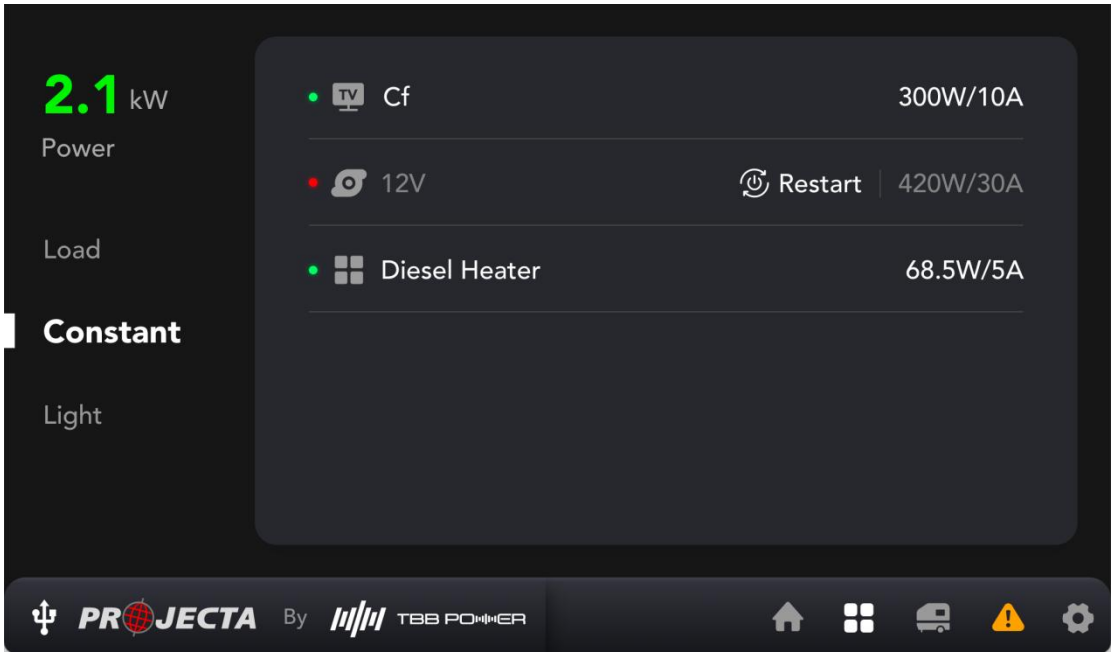


a) The constant load (non switchable) is displayed on the "Constant" page, and when the channel is outputting normally, a green dot is displayed.

b) When the load channel triggers faults such as over current/short circuit, the green dot will turn into a red dot. Please check the load and wiring harness at this time, and only restart after troubleshooting

## Light load page

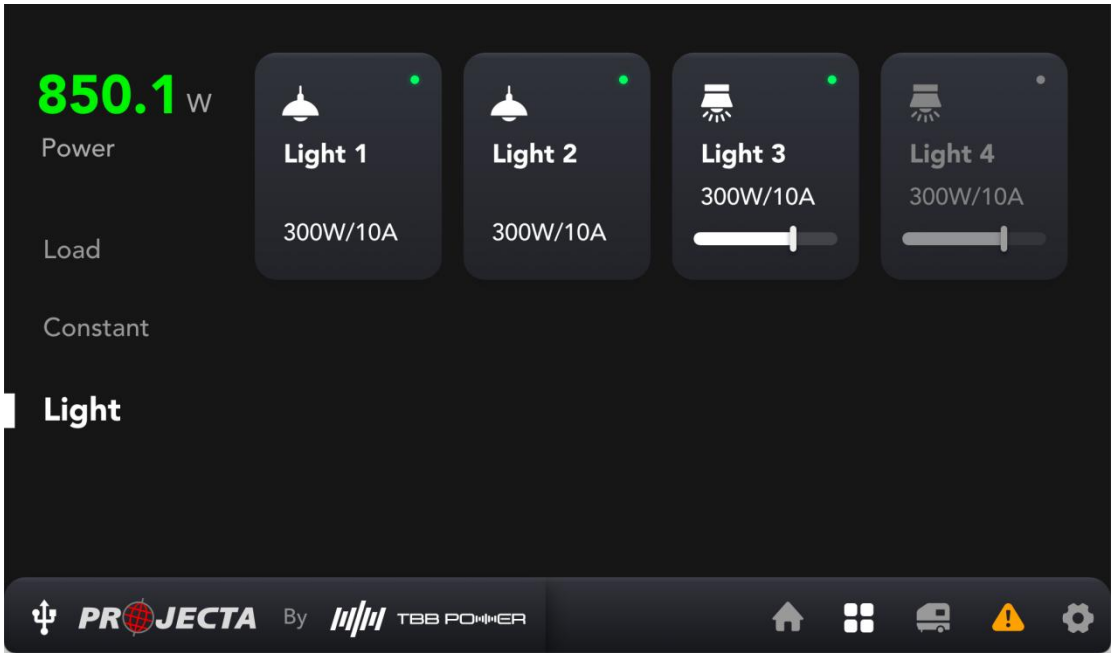


a) The Light control page shows what light can be turned ON or OFF.
When the light is turned on, the light icon is white with a green dot in the upper

right corner. If the light is turned off, the icon turns gray and the green dot disappears.

b) Each load area will display the current channel power consumption and current in real-time

c) When the light channel triggers faults such as over current/short circuit, the green dot will turn into a red dot. Please check the light and wiring harness at this time, and only restart after troubleshooting

d) The real-time total power consumption of all channels is displayed in the upper left corner of the page

## Sensor Page

Leveling

Ensures your RV is level when parked.

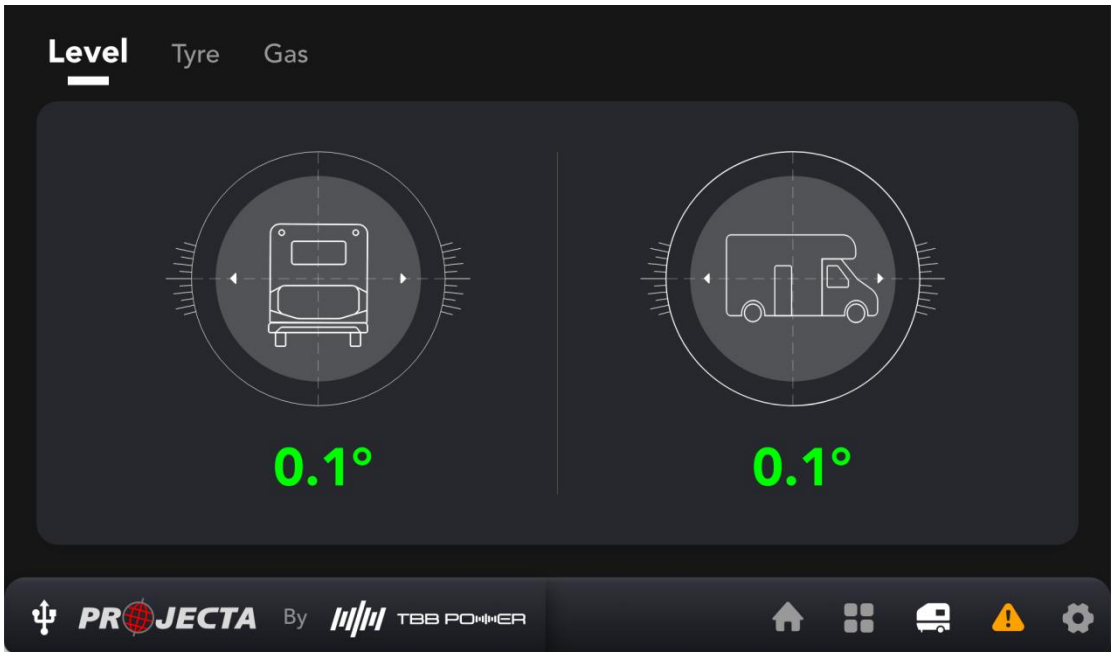

## TPMS

Monitors tyre pressure to prevent premature wear with high / low warning setting.

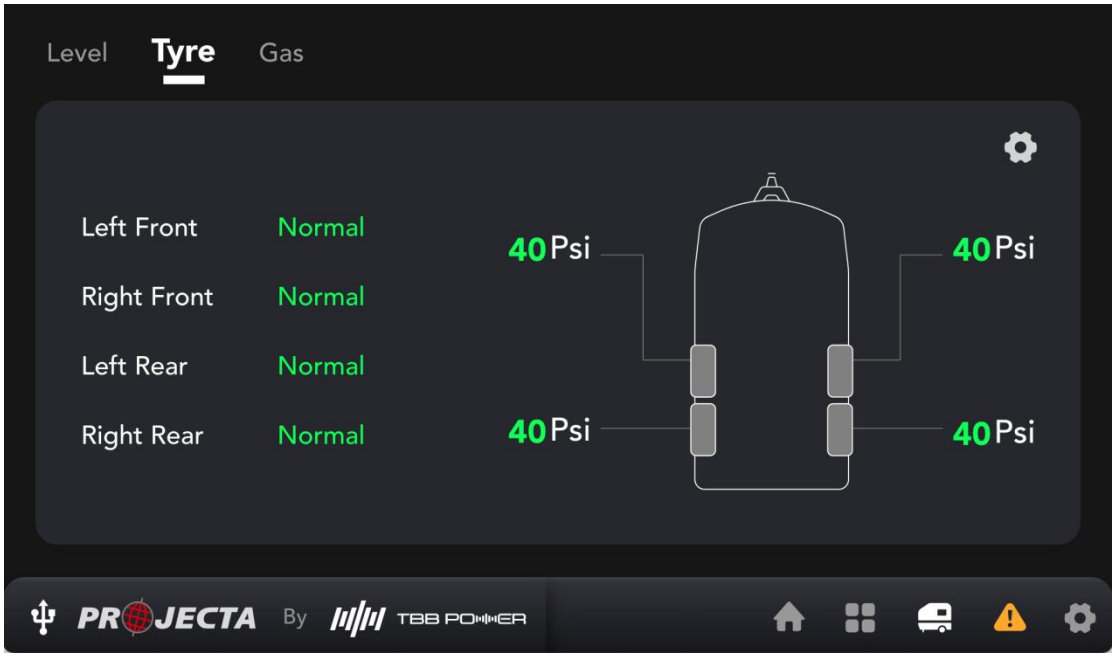


## GAS sensor

Monitors the level of gas available within the gas cylinders.

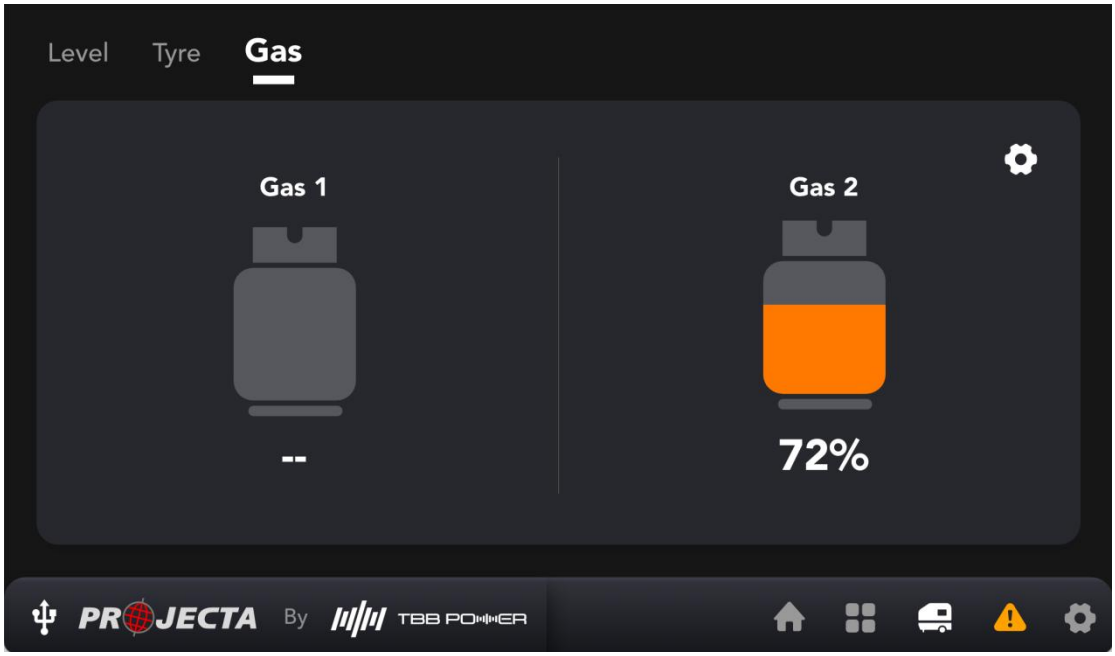

## Setting Page

The setting menu allows the user to make basic changes to the system, including:

1) Screen setting.

The user can set screen brightness level, time and date, sleep time, buzzer enable, temperature unit selection.

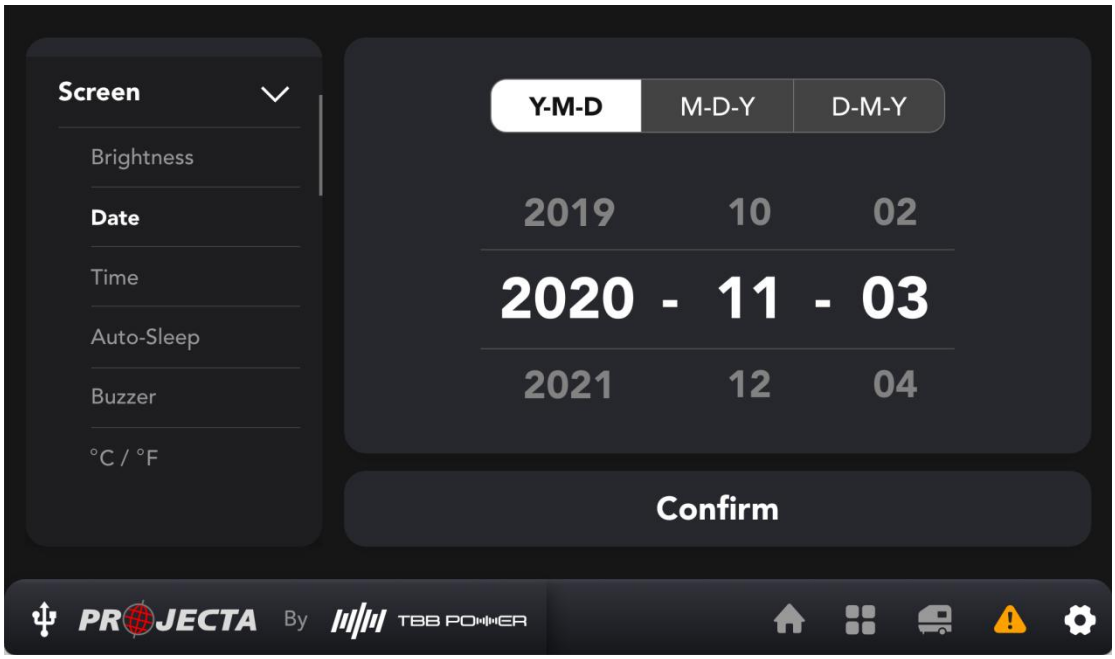


2) Rename.

In this page, the load and water tank can be renamed.

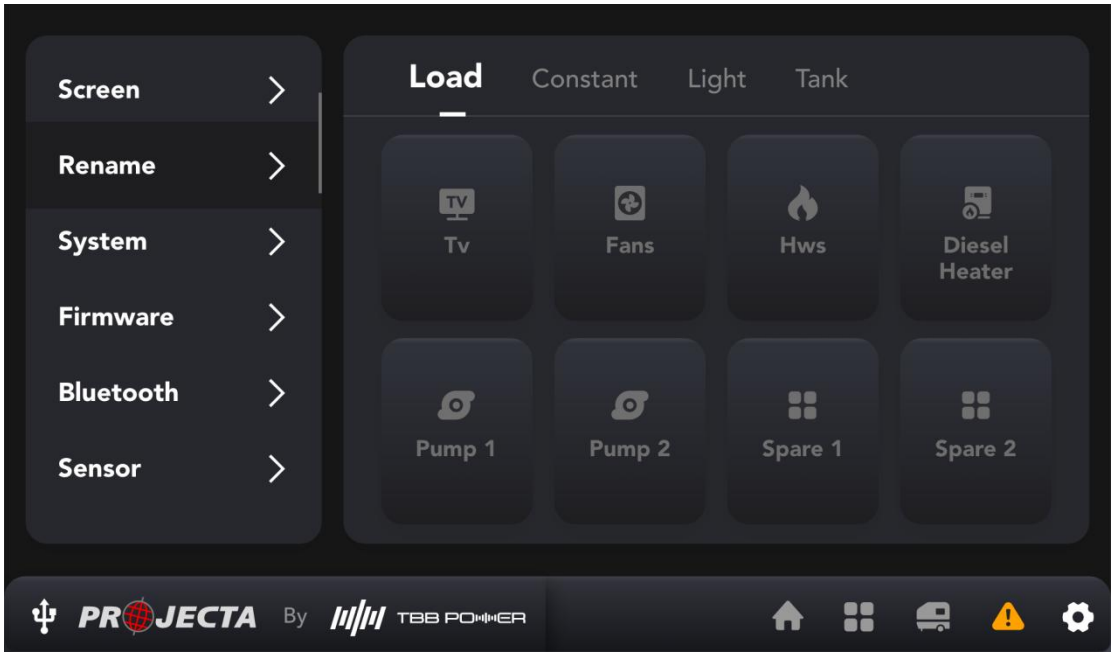


Further, the icon also can be changed when renaming the load.

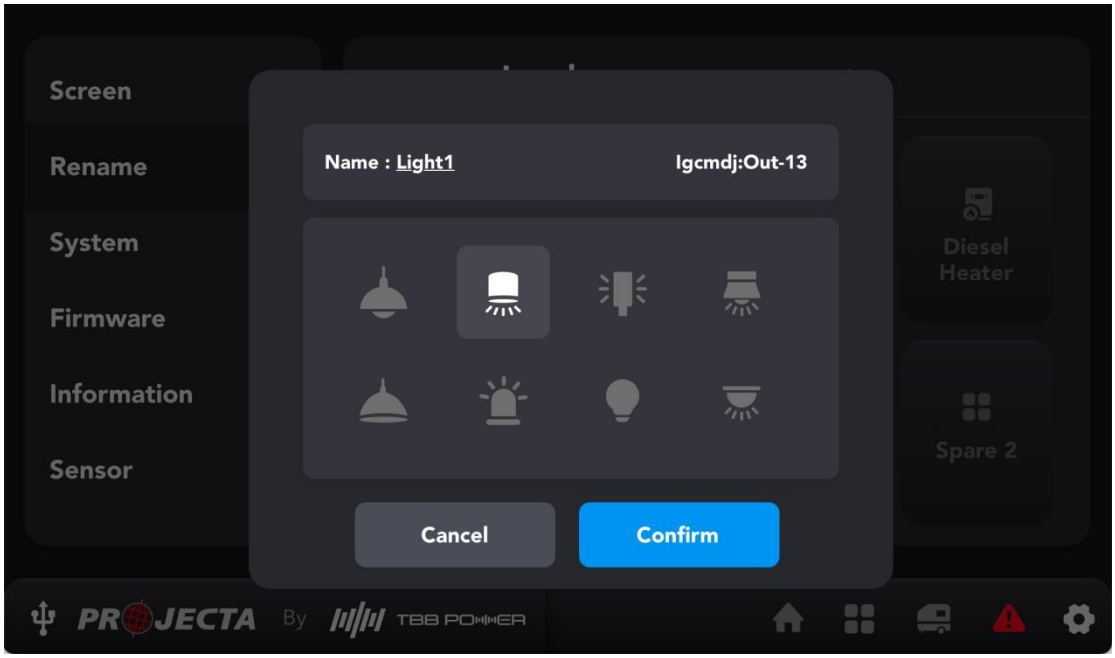


3) System.

The user can engage the ’Solar Automatic Wake Up Function’

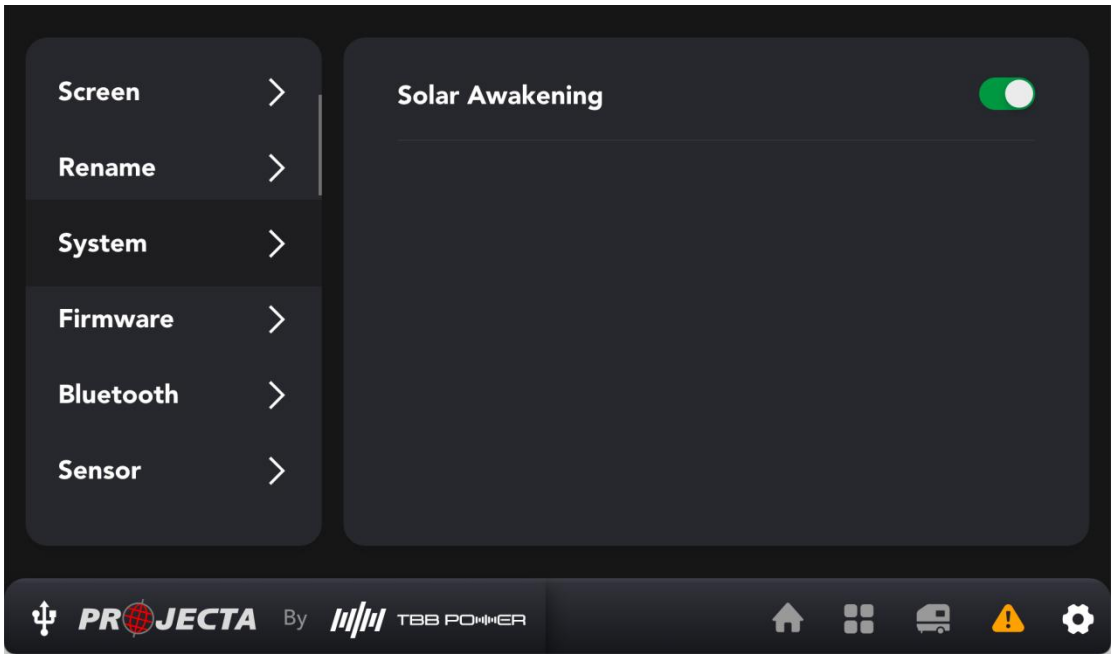


4) Firmware.

Displays all software revisions of available components.

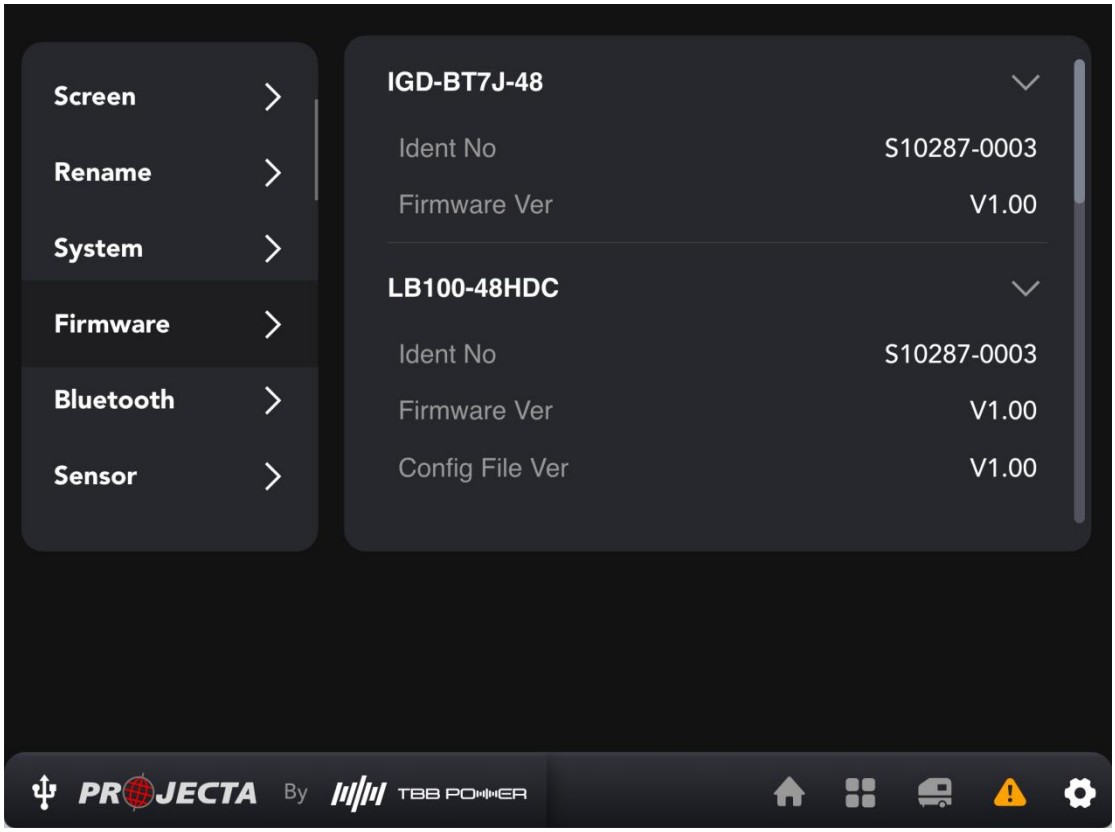


5) Bluetooth.

Set the display screen Bluetooth name and Bluetooth pairing password for Intelli-Grid mobile app connection

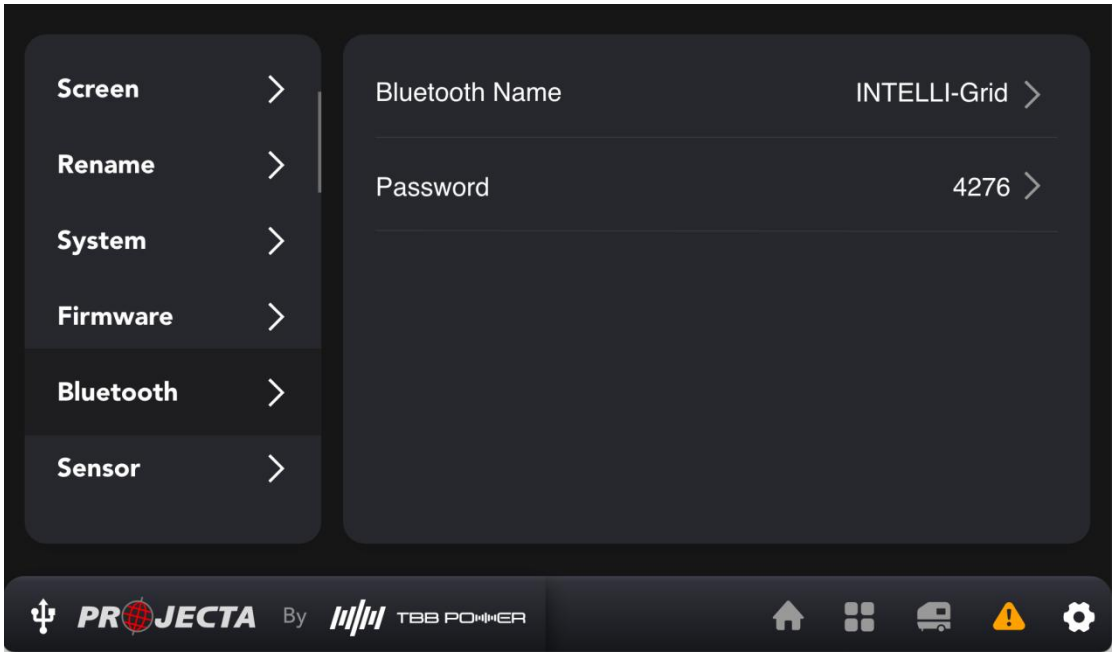


6) Sensor.

Select the RV model icon for Leveling and TPMS sensor display pages

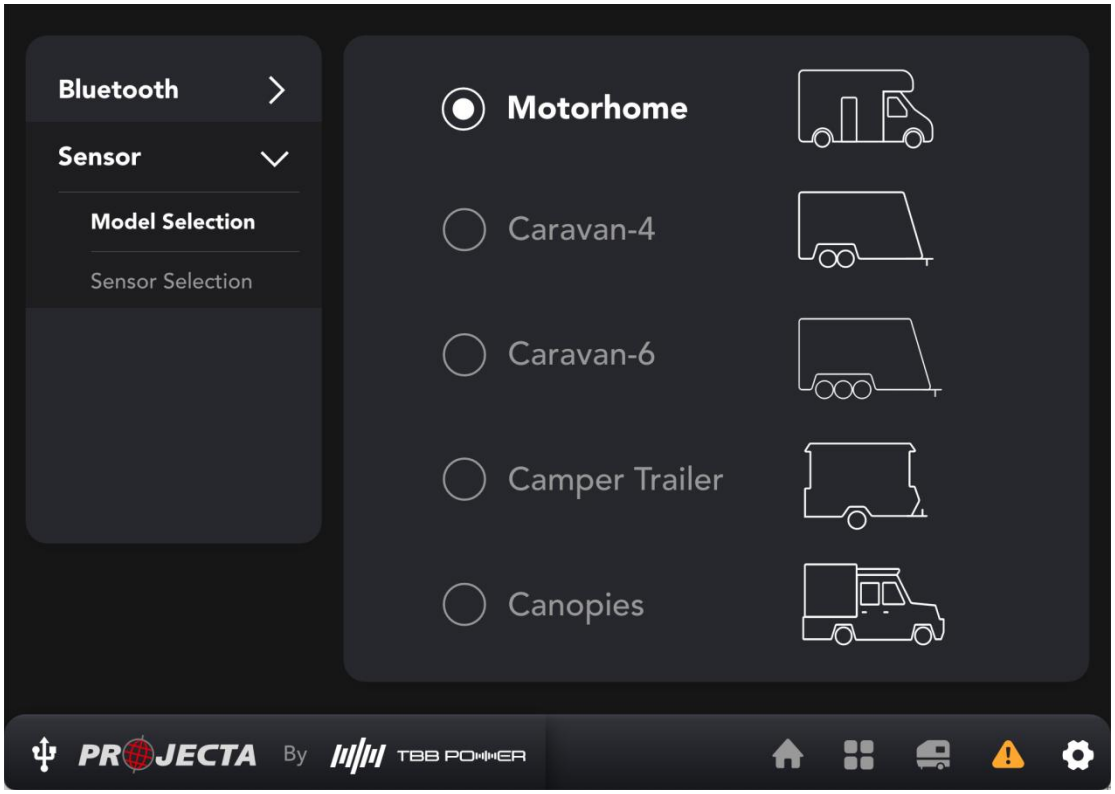


The user can set Gas/TPMS/Leveling sensor parameters

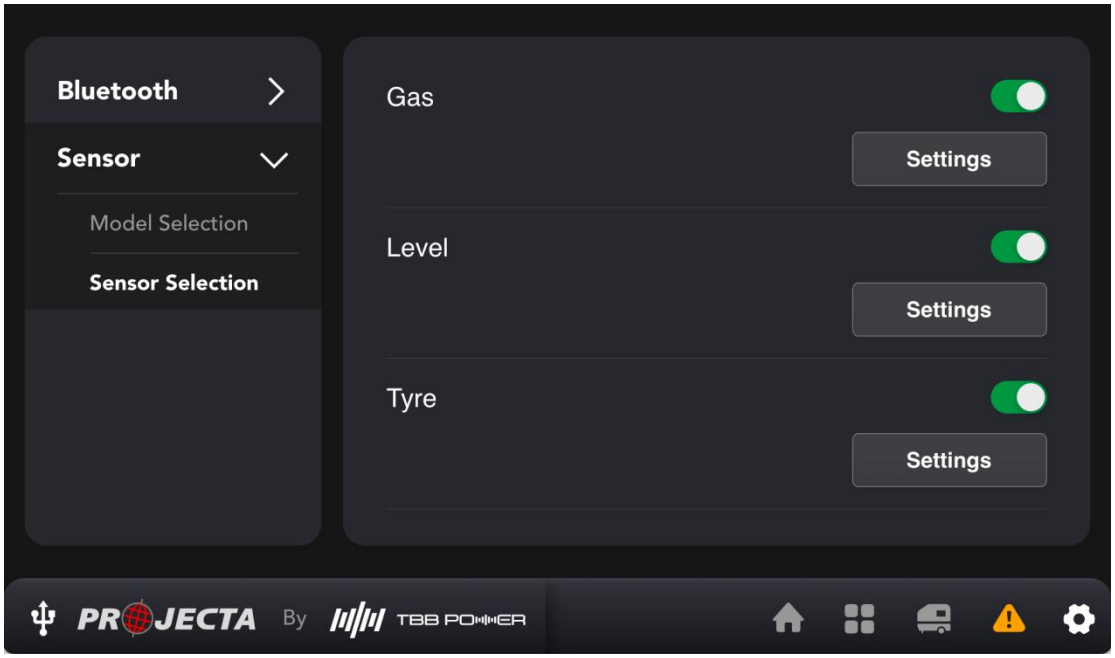

## Update Page

After inserting the USB drive into the back of the display, an update firmware pop-up will automatically appear

“Upgrade”:Used to select and update firmware for each module

“Import”:Used to select and update customized logos.

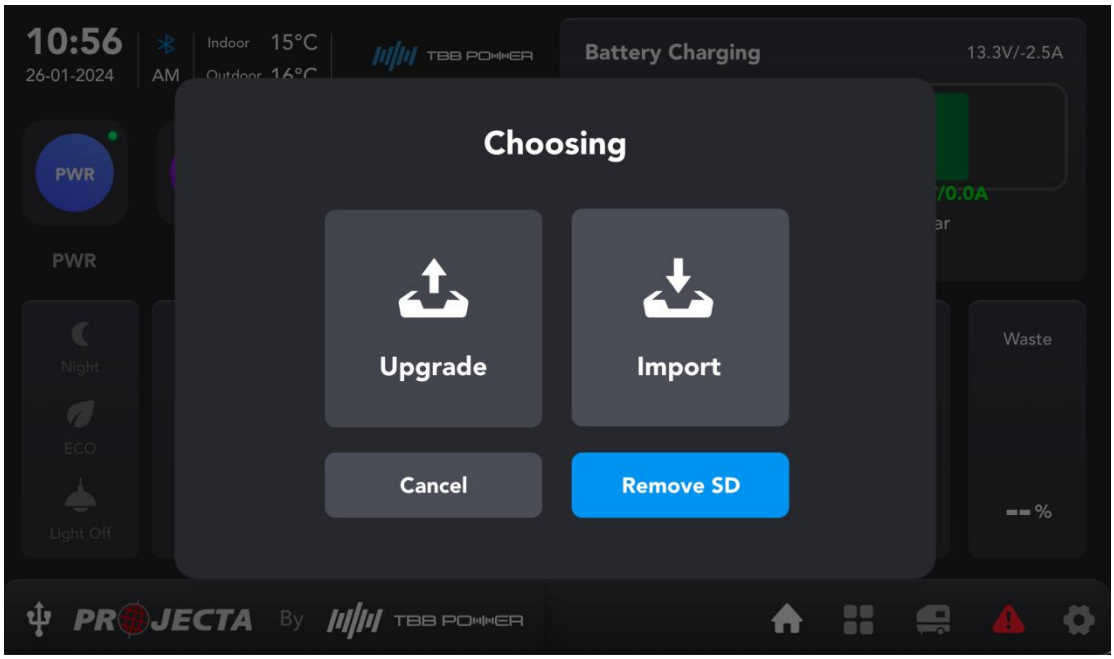


## Statistical Chart Page

You can enter the statistical data chart page by clicking on the BAT/Inverter/Vehicle Charge/Solar area on the homepage。

### Inverter/Charger

### Battery

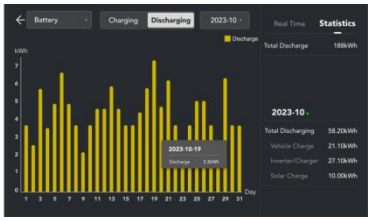

### Vehicle Charger

Solar Charger

## COMPONENT SPECIFICATIONS

INVCHR4-48V ALL IN ONE 48V 4KW INVERTER/CHARGER
Has a built-in charger/inverter combination, MPPT solar charger controller, DCDC bi-directional charger and isolation. The all-in-one box design will save the significant installation space.
Perfect for powering the most demanding 240V appliances on the go while operating on or off the grid. An RCD is included to ensure maximum safety for the unit and operator. The inverter/charger is fitted with grid power boost which is great if the shore power or generator is weak. Grid power boost will supplement the shore power to ensure all your appliance can run.

| SPECIFICATIONS | |
|---|---|
| Model | INVCHR4-48V |
| Inverter Charger | |
| Norminal battery voltage | 48V |
| Input voltage range | 40~57V |
| Inverter Power: "ON" (No Load) / "OFF" | ≤300mA / ≤1mA |
| Cont. output power @25℃ (VA)/ (W) | 4.0kVA / 4.0kW |
| Peak Power (2s) | 8.0kW |
| AC output voltage/frequency | 240V±3%, 50Hz±1% |
| Power factor cosΦ | 1 |
| Inverter / AC Charger Efficiency | Maximum: 96.5%, Full load: 94.8% |

| | |
|---|---|
| Harmonic distortion (THDV) | ≤2% |
| AC IN voltage/frequency | AC 176V~264V，45~65Hz |
| Max AC charge current | 75A(Note:-70Amp Charging when SOC is 0~80%, & battery temperature is 25~35℃) |
| Input Power factor | ≥0.99 |
| Transfer time | 2ms(<15ms in Weak AC source mode) |
| RCBO Safety Switch | 20A/30mA |
| Bi-directional DC-DC | |
| The system is on with (No Load) | ＜1mA@12V |
| 12V Input / Output Current | 120A |
| 48V Input / Output Current | 30A@12V |
| DC-DC Power | 1500W@12V |
| Efficiency | Maximum: 95.5%, Full load: 94.8% @12V |
| MPPT | |
| PV input voltage range | 18~60V（18-50V@25℃） |
| Max PV short circuit current | 60A |
| Maximum Charge from the PV panels | 1800W |
| Max Charging Current | 30A<br>(Solar Voltage <26V charge @20A (1kW);<br>Solar Voltage >26V charge @30A (1.5kW)) |
| Efficiency | Maximum: 97.6%,Full load: 95% |
| MPPT efficiency | >99.5% |
| Others | |
| Dimension | 454.5x306.2x88.1mm |
| Weight | 8.1kg |
| Cooling | Forced fan |
| Noise | ≤55db |
| IP rating | IP20 |
| Altitude | 0~5000m（Derating when >2000m） |
| Operating temperature range | -30℃~65℃（Derating when > 30℃） |
| Storage temperature range | -40℃~75℃ |
| Humidity | 5%~95%, No condensation |

## Connection compartment

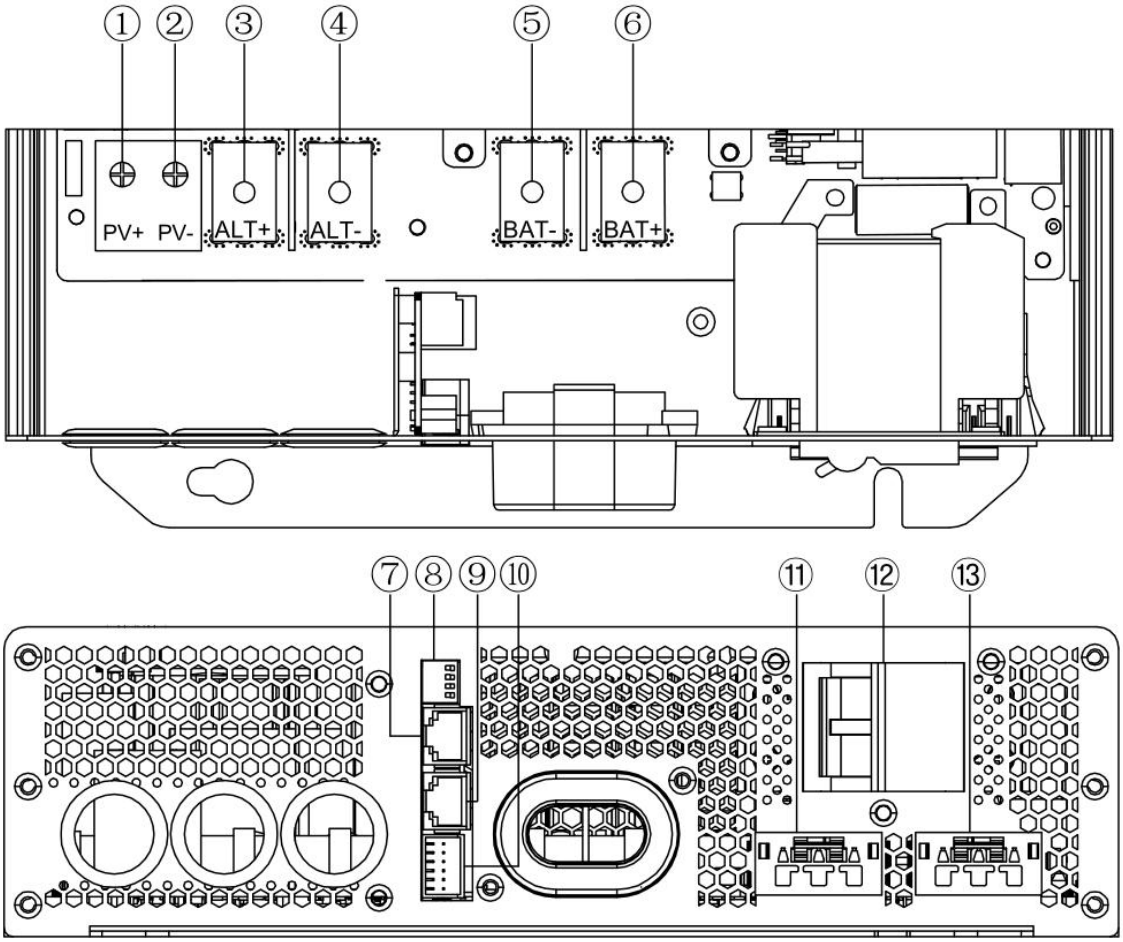


| No. | Silk-screen | Definition |
|---|---|---|
| ① | PV+ | Solar panel positive port |
| ② | PV- | Solar panel negative port |
| ③ | ALT+ | ALT positive port |
| ④ | ALT- | ALT negative port |
| ⑤ | BAT- | Backup battery negative port |
| ⑥ | BAT+ | Backup battery positive port |
| ⑦ | CAN | CAN communication port |
| ⑧ | | Dip switch |
| ⑨ | Display | For display connection |
| ⑩ | COM | COM port |
| ⑪ | AC IN | AC input port. Connector type: WAGO 770-713<br>L: live line, PE: ground line, N: zero line |
| ⑫ | RCD | RCD safety switch |
| ⑬ | AC OUT | AC output port. Connector type: WAGO 770-703<br>L: live line, PE: ground line, N: zero line |

## LED Indicators

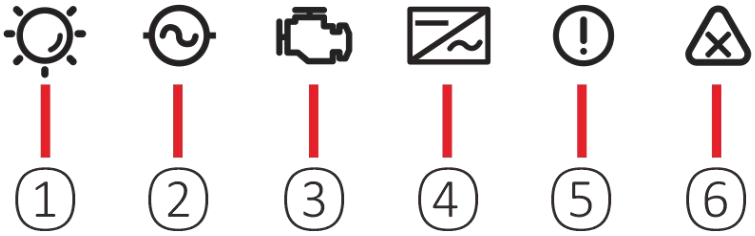


Table 2-1 LED indicators

| No | Name | Color | Function |
|---|---|---|---|
| ① | Solar | Green | Off: No solar input<br>Slow flashing: Solar input is detected but MPPT is not working<br>ON: MPPT charger is working |
| ② | AC in | Green | Off: No AC input<br>Slow flashing: AC input detected but no charging or bypass power supply<br>Fast flashing: AC charger is working<br>ON: Bypass power supply is working |
| ③ | DC/DC | Green | OFF: Alternator is not working.<br>Slow flashing: Alternator input is detected but DC/DC is not working<br>Fast flashing: 48V battery is charging to starter battery or powering the loads.<br>ON: 12V alternator is charging to 48V battery. |
| ④ | Invert | Green | OFF: 48V battery is not detected<br>Slow flashing: 48V battery is connected<br>Fast flashing: Inverter power assist function is working.<br>ON: Inverter is working. |
| ⑤ | Alarm | Yellow | OFF: No alarm<br>Fast flashing: Alarm happens |
| ⑥ | Fault | Red | OFF: No fault<br>Fast flashing: Fault happens |

*Slow flashing is on for0.5seconds and off for 1.5 seconds in a loop.

*Fast flashing is on for 0.5 seconds and off for 0.5 seconds in a loop.

## GENERATOR AUTO STOP/START

The INTELLI-Grid system can manage the generator by turning it on or off depending on the state of charge of the battery. Even manual start / stop is possible via the screen.
How to wire?
INTELLI-Grid runs a simple 2 wire dry contact system. When the relay is closed the generator turns on. when the relay turns off the generator will turn off. The generator will need to have a remote 2 wire start.
Steps:-

1. Wire the generator to IGBRDJ-48 board 2-wire cable labelled AGS.
2. Enable the Generator,Via the main home page press the “Gen” button

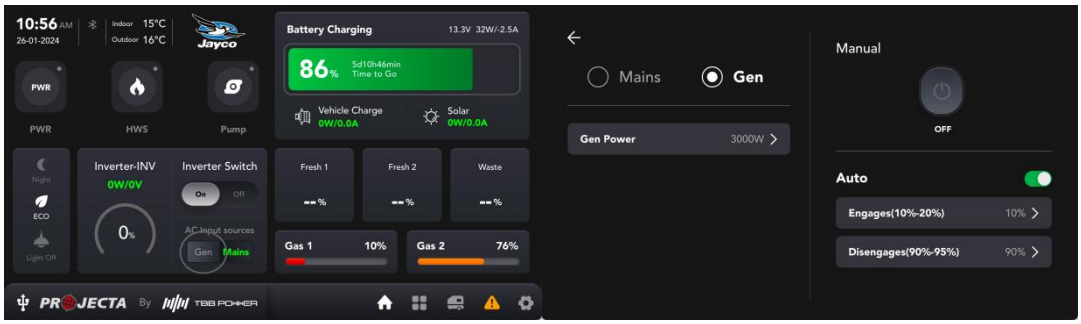


## IGCMD18

18 OUTPUT MASTER CONTROL MODULE

This is an input and output controller that can provide a constant 12V power supply for power loads, memory retention circuits, and other lighting.It has built-in low-voltage disconnection and inhibit functions for selected outputs. Control communication with external sensors and devices, and turn off power to non essential loads when the battery is low.

| SPECIFICATIONS | | |
|---|---|---|
| **Model** | IGCMD18 | |
| **INPUT** | Working Voltage | 10~16V |
| | Rated voltage | 12VDC |
| | Rated Current | 100A |
| **OUTPUT** | 18 Channels | 15A(PWM dimming)*8 |
| | | 15A(On/Off Output)*8 |
| | | 30A(On/Off Output)*2 |
| **Dry Contact** | 10 Channels | 2A/each channel |

| | | |
|---|---|---|
| **Input detective channels** | On-Off input | 8 |
| | Temperature Sampling | 4 |
| **Comm Port** | CAN | 2(non-isolated CAN) |
| | CAN | 1(RVC connector) |
| | RS485 | 2(non-isolated RS485) |
| | Bluetooth | 1 |
| | LIN | 1 |
| | RF | 1 |
| **Protection Function** | Input over current protection | Yes |
| | Under voltage | Yes |
| | Output over current protection | Yes |
| | Short Circuit Protection | Yes |
| | Over Temperature Protection | Yes |
| **Water Sensor** | Capacitive(optional) | 1 |
| | Conductive(i.e. P/n:PMWS200) | 4 |
| **RJ45 Connector** | With power | 2 |
| | without power | 2 |
| **Other** | Power consumption | ≤7mA |
| | Weight | 2.8Kg |
| | Dimension | 382x295x76mm |
| | Auxiliary Power Supply | +12V or +48V |
| | Storage temperature range | -40℃~85℃ |
| | Operating temperature range | -20℃~60℃ |
| | IP Class | IP2X |

## Connection compartment

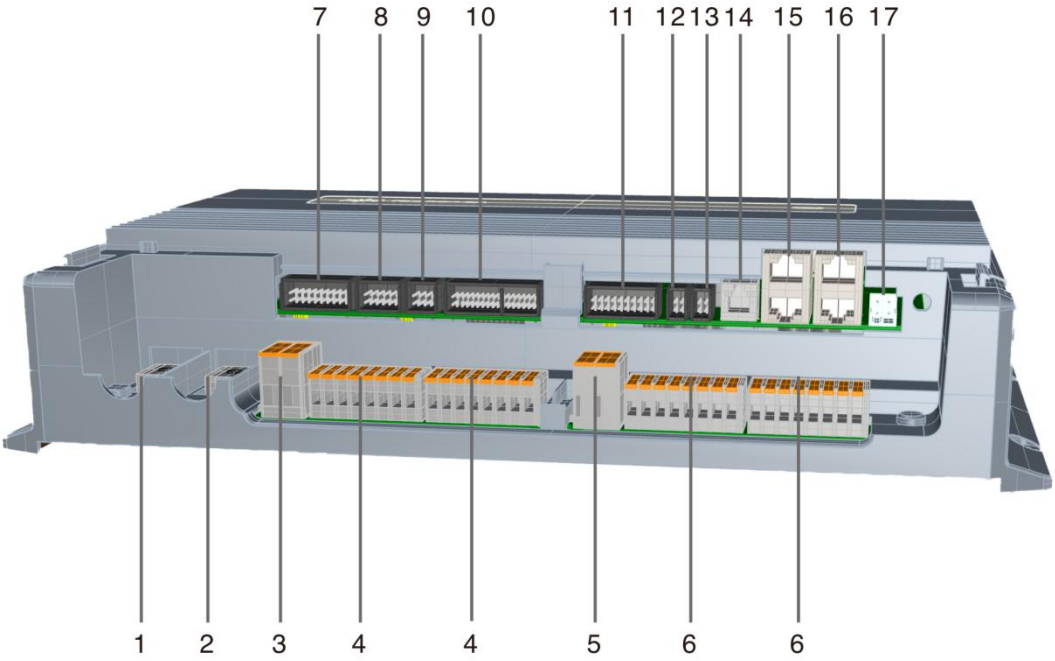


| No | Terminal Definition | Polarity | Note |
|---|---|---|---|
| 1 | BAT+ | Power Input | |
| 2 | BAT- | Power Input | |
| 3 | Negative Connector | 30A output negative connector | |
| 4 | Negative Connector | 15A output negative connector | |
| 5 | Positive Connector | 30A output positive connector | |
| 6 | Positive Connector | 15A output positive connector | |
| 7 | Dry In | Sampling interface | 4-way temperature sampling;<br>2-way input dry contact;<br>4-way output dry contact;<br>1-way ignition signal output |
| 8 | Combine | Inverter Communication interface | |
| 9 | BMS | Lithium battery communication interface | |
| 10 | Water | Water level interface | Support 4-channel Conductive water level sensor;<br>8-channel Capacitive |
| 11 | Dry Out | Dry contact interface | |
| 12 | Display 1 | Display interface | L10/L7 screen power supply, |

| | | | |
|---|---|---|---|
| 13 | Display 2 | Display interface | CAN_Mon/485_DTU communication, wake-up signal |
| 14 | LIN | Communication interface | Lin Communication |
| 15 | IOT | 4G module interface | 4G module power supply CAN_User/485_User communication |
| 16 | Xensor | Sensor interface | Provide power and communication to LEVEL and TPMS |
| 17 | RV_C | Communication interface | CAN_User |

## LED Indicators

| No | Color | Function |
|---|---|---|
| ① | Red | ON: Fault happens |
| ② | Green | Fast flashing(100ms): Device initialization<br>Flashing(1s): Working normally<br>Flashing(2s): Charging only Mode<br>Slow flashing(5s):The device enters sleep mode |

## PMTPMS

TYRE PRESSURE MONITORING SYSTEM MODULE

The Tyre Pressure Monitoring System (TPMS) monitors the RVs tyre pressure before and during the journey.

| SPECIFICATIONS | |
|---|---|
| PART NO | PMTPMS-S x 4 (one for each tyre) |
| PART NO | Receiver-PMTPMS-R |
| INPUT | 6-24V |
| WORING CURRENT | 30mA |
| WORKING TEMPERATURE | -40°C ~ 85°C |
| HUMIDITY | <95% |
| RECEIVING FREQUENCY | 433.910Mhz |
| WIRED COMMUNICATION | RS485 |
| WEIGHT | 150g |
| PART NO | Sender * 4 -PMTPMS-S |
| WORING VOLTAGE | 2.2 ~ 3.6V |
| BATTERY TYPE | CR1632 |
| TRANSMITTED CURRENT | <5mA |
| TRANSMITTED POWER | <5dbm |
| TRANSMITTED FREQUENCY | 433.910Mhz |
| PRESSURE RANGE | 14~73 PSI |
| ACCURACY | ± 1.45 PSI |
| WORKING TEMPERATURE | -30°C ~ 70°C |
| WEIGHT | 13.8g |

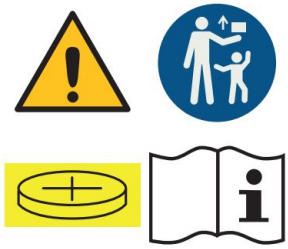

**WARNING**

This product contains a Lithium coin cell battery. Please ensure the coin battery is kept **OUT OF REACH OF CHILDREN**. This includes both new and used batteries. Hazardous if swallowed. The battery can cause severe or fatal injuries in 2 hours or less if it is swallowed or placed inside any part of the body. If a coin battery is swallowed or placed inside any part of the body: **SEEK MEDICAL ATTENTION IMMEDIATELY**. See instructions.

# PMLVL

LEVELLING SENSOR

Level the RV with the levelling sensor which can be monitored via the phone app.

Calibration

To calibrate the level sensor, the RV needs to be level in both forward and back and side to side. Once level, go to the Setting Page, select Level Sensor and press Calibrate. This will zero the sensor.

| SPECIFICATIONS | |
|---|---|
| PART NO | PMLVL |
| WORKING VOLTAGE | 9～16V |
| WORKING CURRENT | 30mA |
| WORKING TEMPERATURE | -40°C～85°C |
| IP RATING | IP20 |
| ACCURACY | ±2° |

# INSTRUCTIONS ON HOW TO PAIR THE GAS SENSORS

Ensure you are using the LCI Lippert Bottle check Bluetooth Gas Gauge.
Enable the GAS Feature.
Go to the GAS Sensor Page.Press the Setting button “small cog” in the top right hand corner

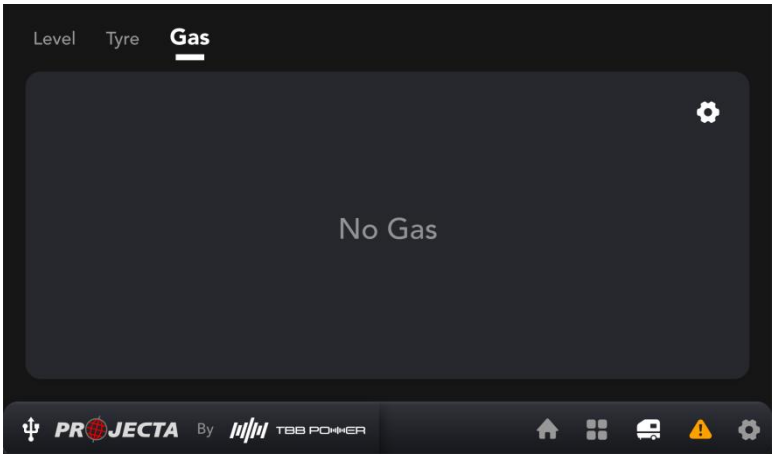


Click on the gas cylinder icon to enter the sensor pairing state

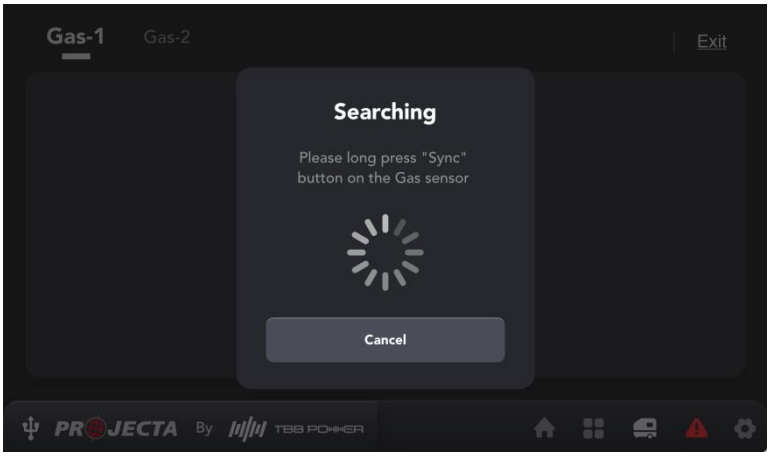


Paring the Sensors.
Long press the”SYNC”button on the gas sensor until a value is displayed on the GAS.

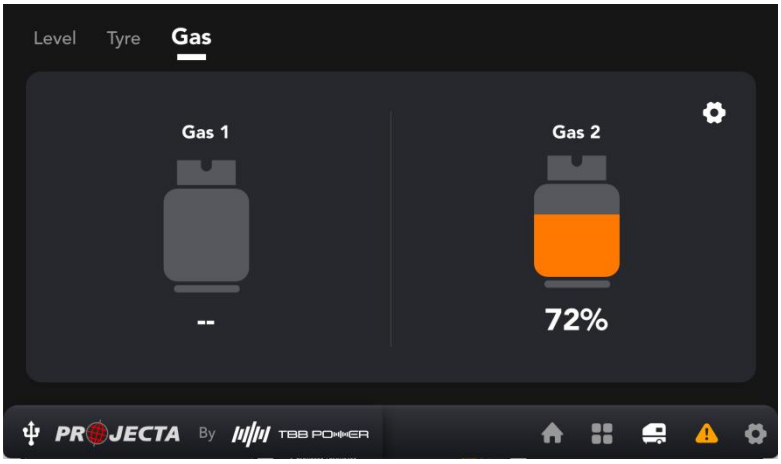


Repeat the process to pair second gas sensor.

# IGD-BT7J-48

7” COLOUR BLUETOOTH MONITOR

The 7”colour display, enables complete control of the RV or commercial application. Its smart, intuitive design provides all the vital information at the press of a button.

| Specification | |
|---|---|
| **Part NO** | **IGD-BT7J-48** |
| Working volatge | 12~48VDC |
| Working Current | 350mA (Screen ON) |
| | 200mA(Screen OFF) |
| Communication | RS485 |
| | CAN |
| | Bluetooth® 5.0 |
| Screen | 7" touch screen,IPS |
| Resolution | 1024px × 600 px |
| TF Card | Support up to 32GB |
| Storage temperature | -30℃~80℃ |
| Operating temperature | -10℃~70℃ |
| Altitude | 5000m |
| Protection category | IP20 |
| Weight | 200g |
| Cooling | Natural cooling |
| Dimensions | 180mm × 115mm × 35mm |

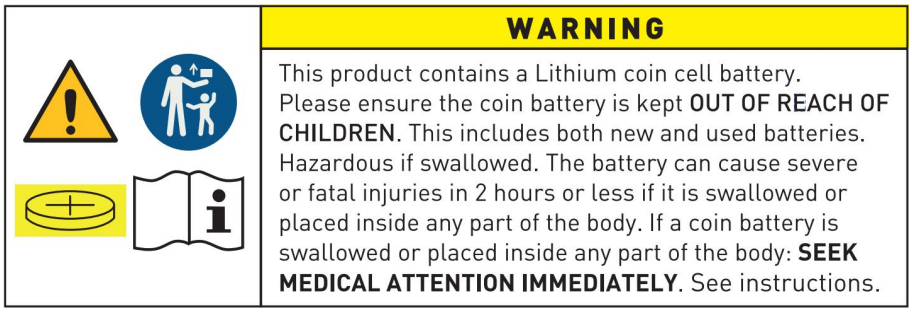


## IGD-BT10J-48(Optional)

10” COLOUR BLUETOOTH MONITOR

The 10”colour display, enables complete control of the RV or commercial application. Its smart, intuitive design provides all the vital information at the press of a button.

| Specification | |
|---|---|
| **Part NO** | **IGD-BT10J-48** |
| Working volatge | 12~48VDC |
| Working Current | 500mA (Screen ON) |
| | 230mA(Screen OFF) |
| Communication | RS485 |
| | CAN |
| | Bluetooth® 5.0 |
| Screen | 10" touch screen,IPS |
| Resolution | 1024px × 600 px |
| TF Card | Support up to 32GB |

| | |
|---|---|
| Storage temperature | -30℃~80℃ |
| Operating temperature | -10℃~60℃ |
| Altitude | 5000m |
| Protection category | IP20 |
| Weight | 1.16kg |
| Cooling | Natural cooling |
| Dimensions | 276mm × 170mm × 43mm |

**WARNING**

This product contains a Lithium coin cell battery. Please ensure the coin battery is kept **OUT OF REACH OF CHILDREN**. This includes both new and used batteries. Hazardous if swallowed. The battery can cause severe or fatal injuries in 2 hours or less if it is swallowed or placed inside any part of the body. If a coin battery is swallowed or placed inside any part of the body: **SEEK MEDICAL ATTENTION IMMEDIATELY**. See instructions.

# BATTERIES

**LB105-48HDC**

48V HIGH DISCHARGE 105AH LITHIUM BATTERY

The LB105-48HDC boasts an astonishing 105Ah capacity and a market leading 100A(5.1kW) discharge capability making it ideal to partner with high current drawing appliances such as 4000W inverters.

| SPECIFICATIONS | |
|---|---|
| PART NO | LB105-48HDC |
| Nominal Capacity | 105Ah |
| Nominal Power | 5.37kWh |
| Nominal Voltage | 51.2VDC |
| Charging Voltage | 56.8VDC |
| Maximum charging current | 100A |
| Continuous discharge current | 100A |
| Maximum discharging current | 150A |
| Built on fuse | Yes |
| Operating Temperature | 2℃~63℃(Charging) |
| | -30℃~63℃(Discharging) |
| Operating Humidity | 10%~90% RH |
| Weight(kg) | 47 |
| IP Class | IP67 & IP69K |
| Vent kit | Support |
| Side installation | Support |
| Recycle life | 3000（0.5C charging，0.5C discharging，DOD 100%，@25℃） |
| Dimensions | 560x360x230mm |

## PMWSW4

Wireless switches make it easy to install additional switches if required. i.e. additional bedroom switch is easy as 2 screws for installation.

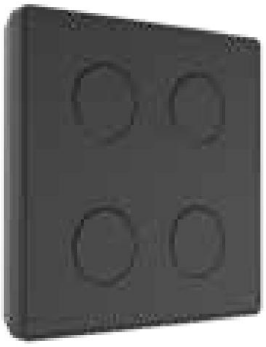

| SPECIFICATIONS | |
|---|---|
| PART NO | PMWSW4 |
| RATED VOLTAGE | 5V |
| BATTERY TYPE | 2 x CR2032 |
| COMMUNICATION | RF 433Mhz |
| EFFECTIVE RANGE | Outdoor 30m, Indoor 15m |
| IP RATING | IP20 |
| WORKING TEMPERATURE | -20°C ~ 60°C |
| MOUNTING | Surface |
| WEIGHT | 40g |

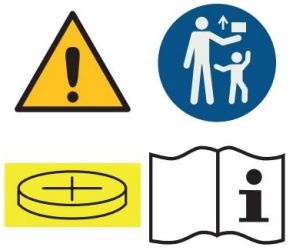

**WARNING**

This product contains a Lithium coin cell battery. Please ensure the coin battery is kept **OUT OF REACH OF CHILDREN**. This includes both new and used batteries. Hazardous if swallowed. The battery can cause severe or fatal injuries in 2 hours or less if it is swallowed or placed inside any part of the body. If a coin battery is swallowed or placed inside any part of the body: **SEEK MEDICAL ATTENTION IMMEDIATELY**. See instructions.

To program the wireless switches (P/n: PMWSW4) follow these steps.

1. Turn on the INTELLI-Grid screen.
2. Go to the home page press the setting button in the bottom right hand corner.

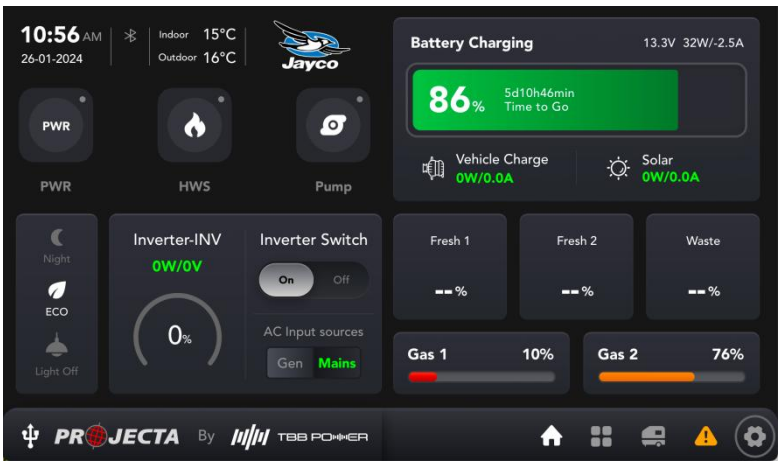


3. Go to the bottom of the left menu selection, click on the logo three times, and then enter the password 1000.

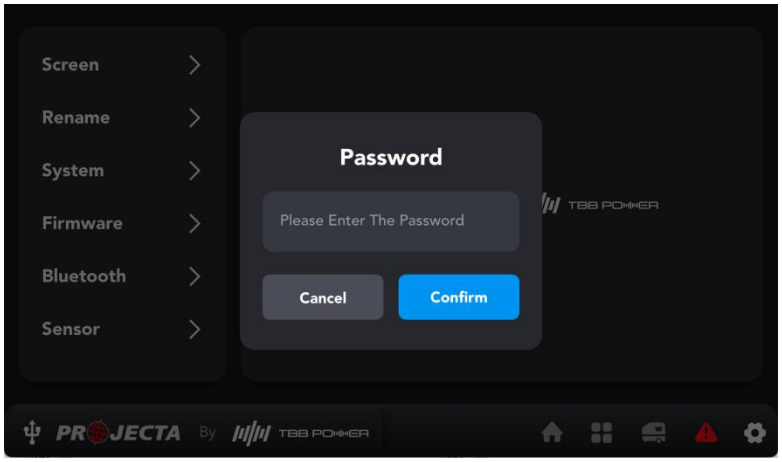

4. Press “Switch Pairing”on the screen then press”Edit” on the screen.

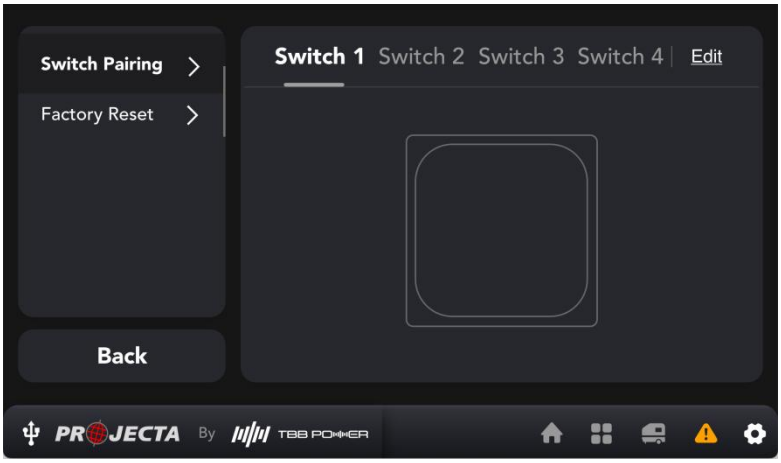


5. Press the + symbol on the screen.

6. Follow the screen prompts which will mean you will need to press one of the buttons on the 4 position switch.

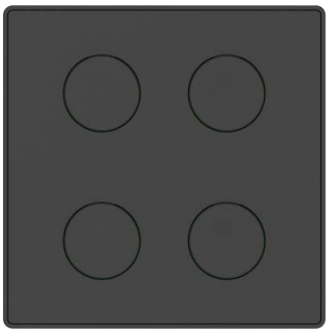

# WATER TANK PROBE

For Intelli-Grid system, a maximum of 4 probes can be monitored.
Note: Always check the probe required for the water tank before pruchase. There are 2 probe styles.

**PMWS200**
• Side installation
• Suitable for water tank
• Depth >200mm

**PMWS400**
• Side installation
• Suitable for water tank
• Depth <400mm

# STRUCTURE AND INSTALLATION

7” Monitor

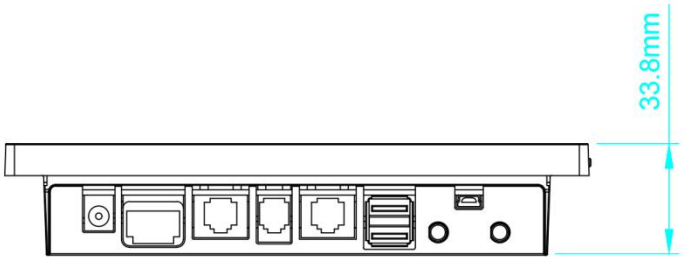


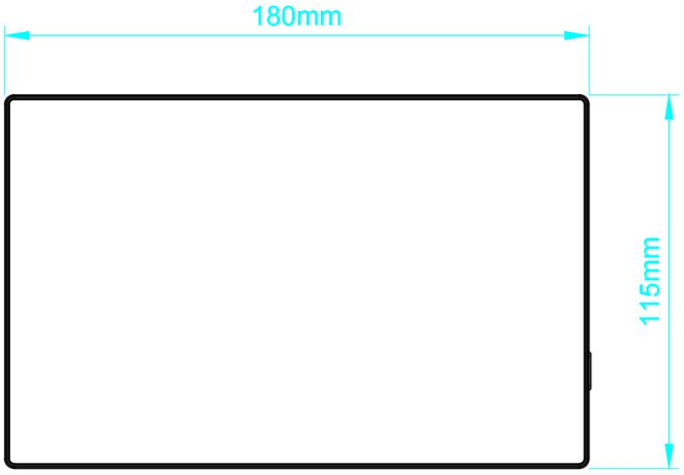


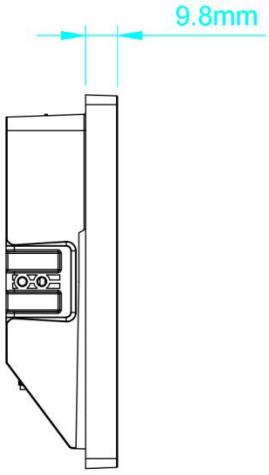


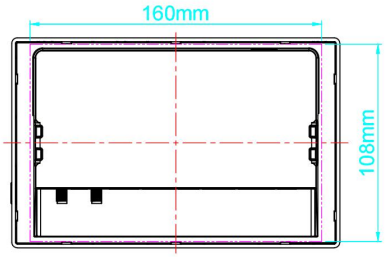


Mounting Dimension

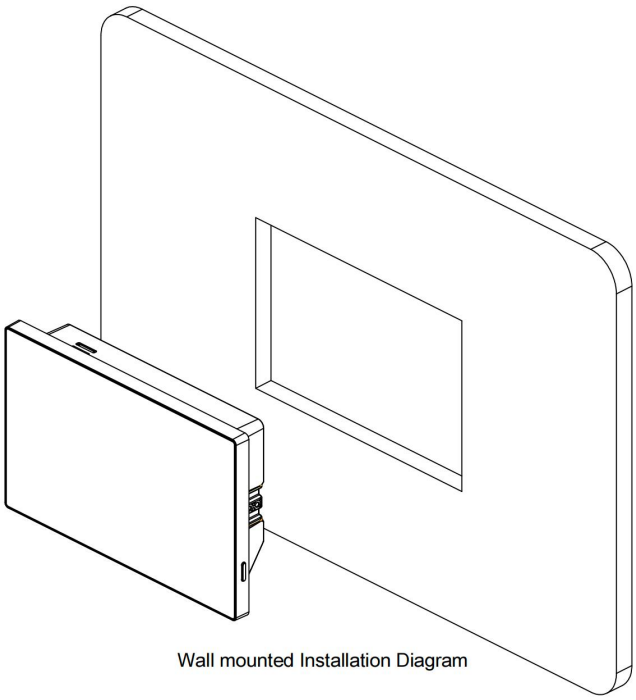

Wall mounted Installation Diagram

10” Monitor

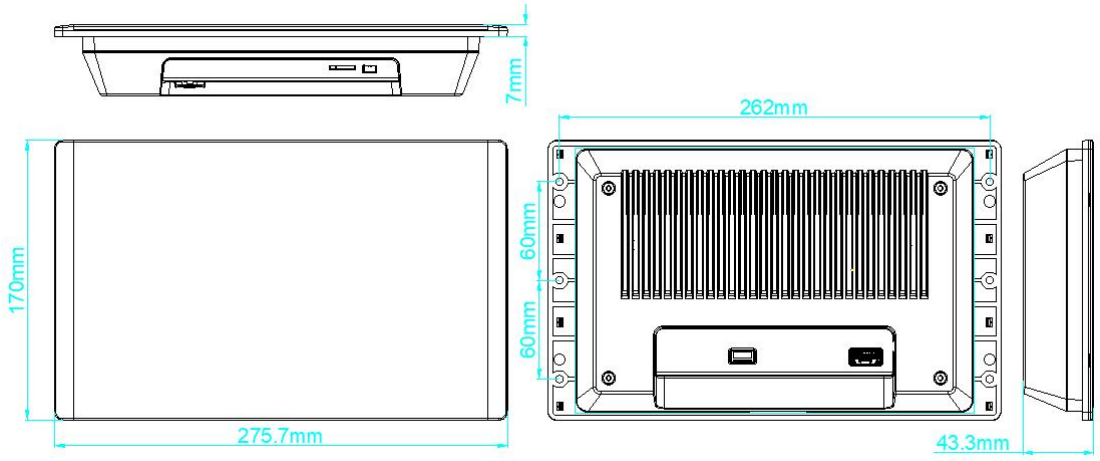


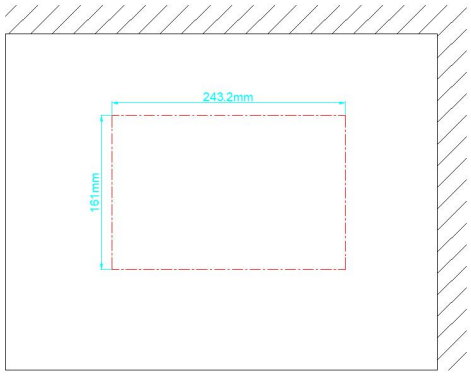


Mounting Dimension

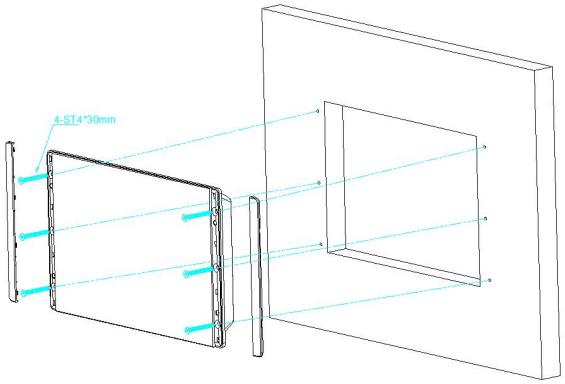


Wall Mounted Installation Diagram

# INVCHR4-BDJ

## A,Layout and Size

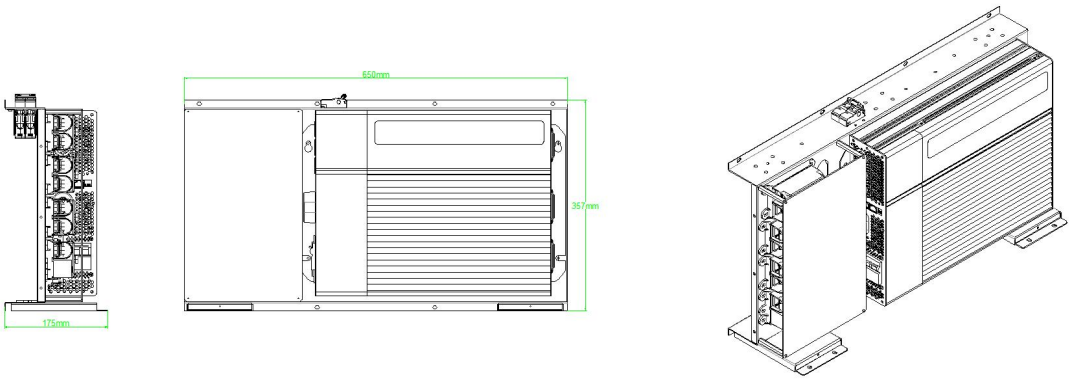


## B,Wire gauge and length

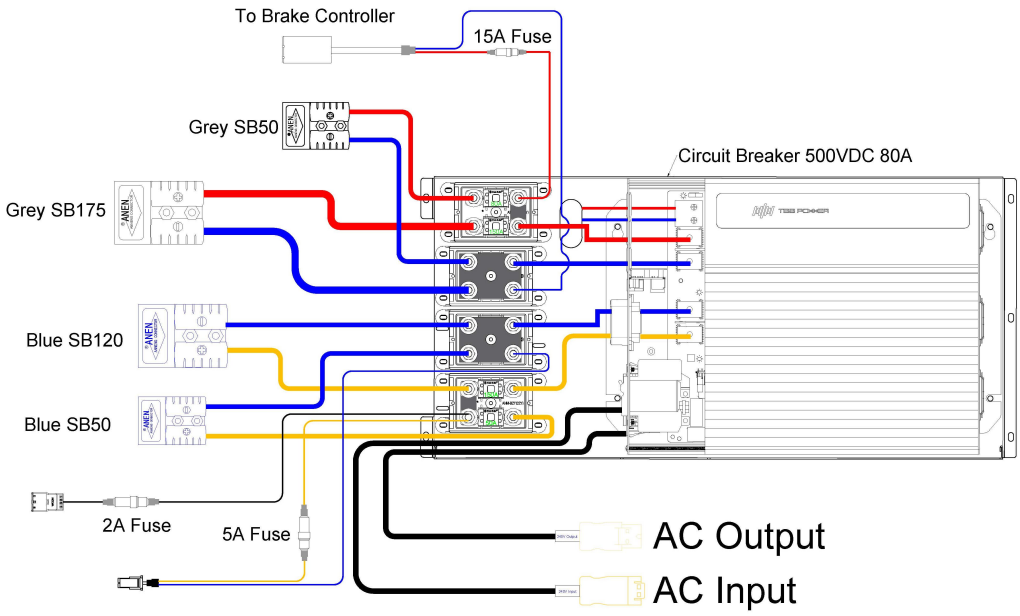


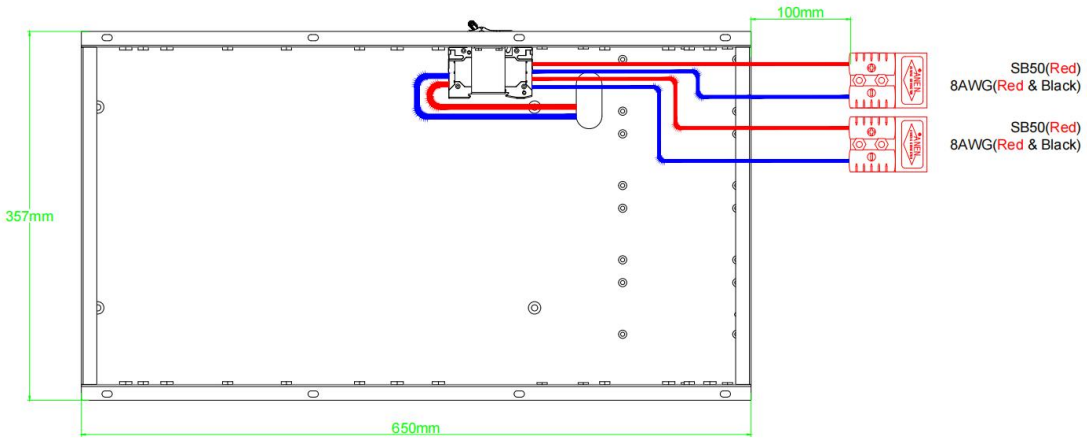

# IGBRDJ-48

## A,Layout and Size

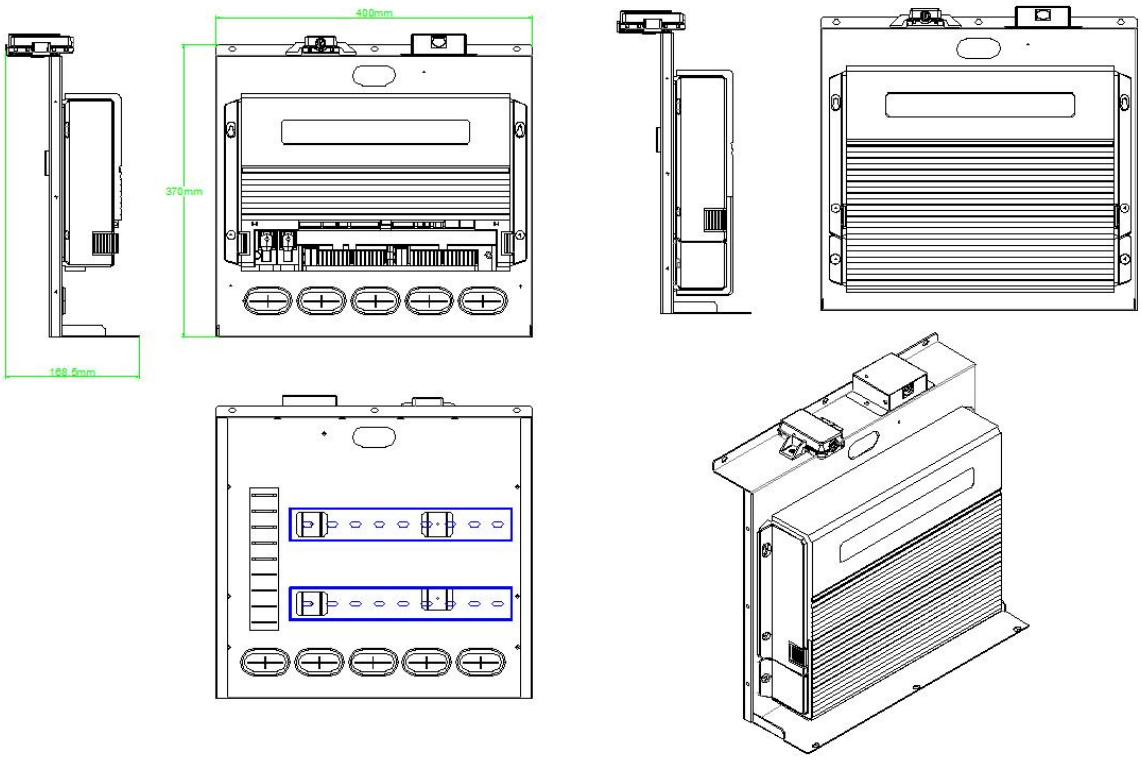


## The Cables To Exit RHS Of Board

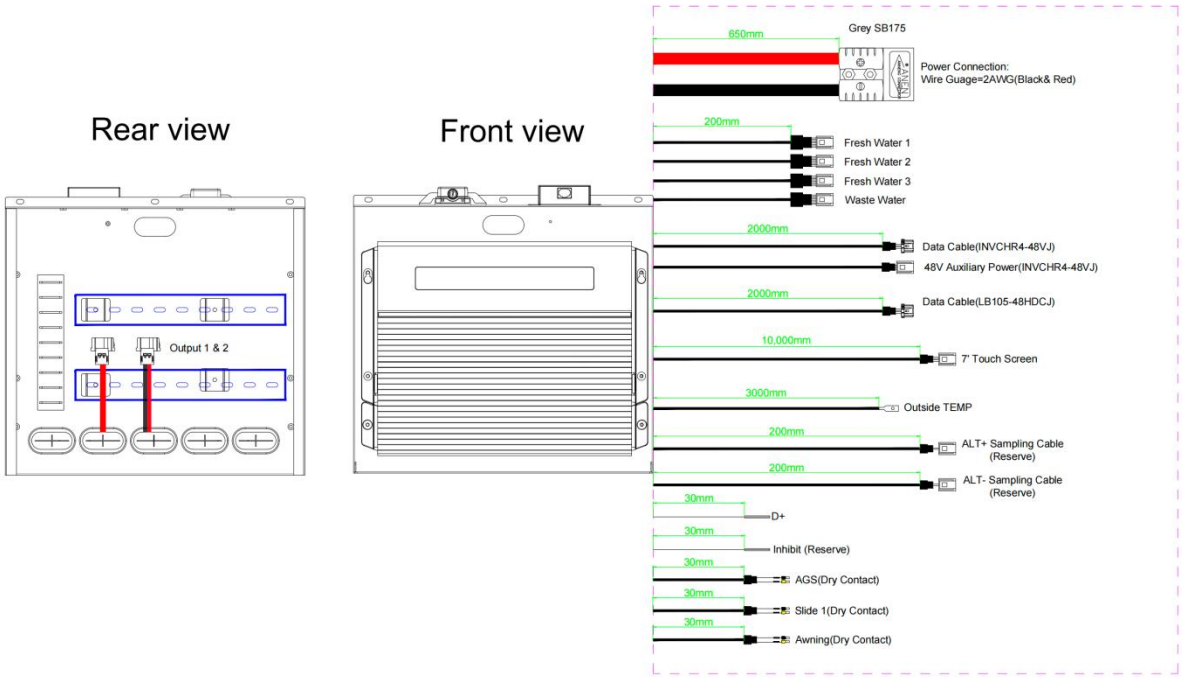

# LB105-48HDCJ

## A,Layout and Cable

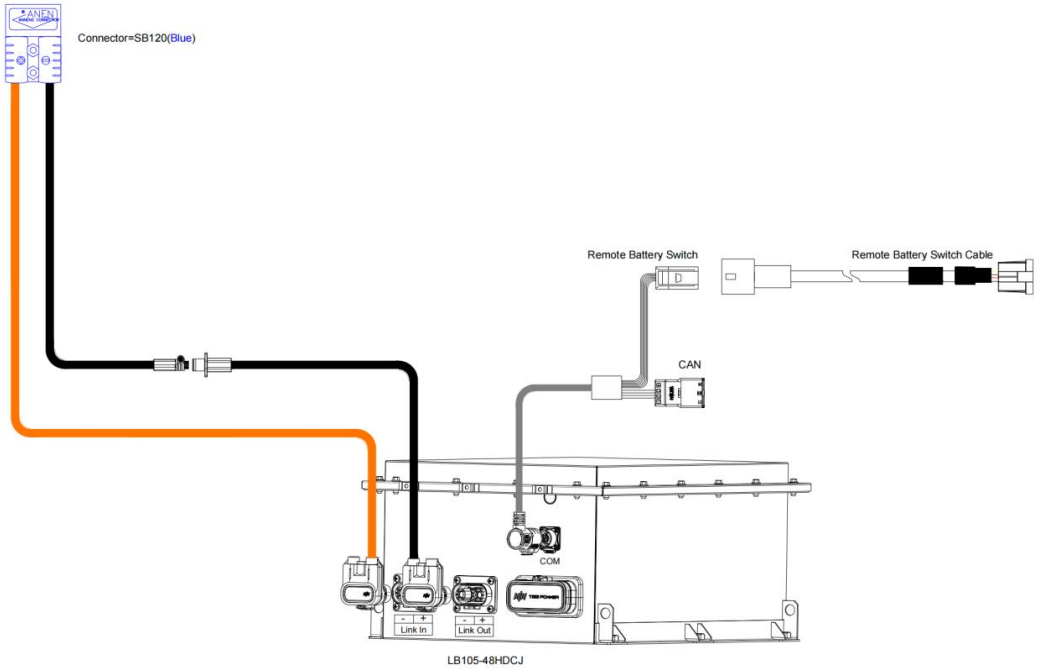

# Quick Start Wiring Guide(with AC)

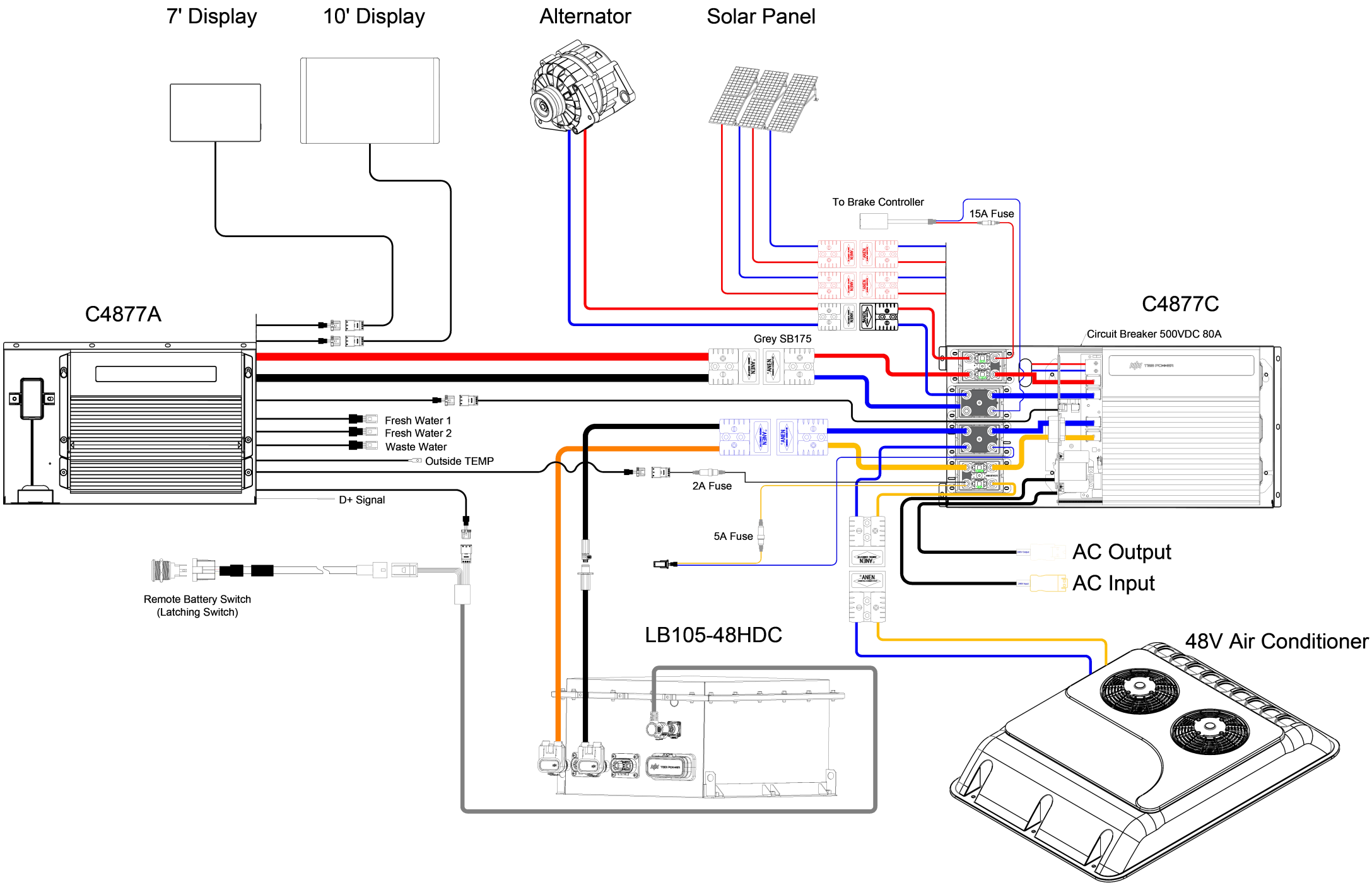

NOTES

NOTES

NOTES

# WARRANTY STATEMENT

## Applicable only to product sold in Australia

Brown & Watson International Pty Ltd of 1500 Ferntree Gully Road, Knoxfield, Vic., telephone (03) 9730 6000, fax (03) 9730 6050, warrants that all products described in its current catalogue (save and except for all bulbs and lenses whether made of glass or some other substance) will under normal use and service be free of failures in material and workmanship for a period of five (5) year (unless this period has been extended as indicated elsewhere) from the date of the original purchase by the consumer as marked on the invoice. This warranty does not cover ordinary wear and tear, abuse, alteration of products or damage caused by the consumer. Projecta solar panels are covered by a 1 year warranty for materials and workmanship and a 20 year warranty for at least 80% power output.

To make a warranty claim the consumer must deliver the product at their cost to the original place of purchase or to any other place which may be nominated by either BWI or the retailer from where the product was bought in order that a warranty assessment may be performed. The consumer must also deliver the original invoice evidencing the date and place of purchase together with an explanation in writing as to the nature of the claim.

In the event that the claim is determined to be for a minor failure of the product then BWI reserves the right to repair or replace it at its discretion. In the event that a major failure is determined the consumer will be entitled to a replacement or a refund as well as compensation for any other reasonably foreseeable loss or damage.

This warranty is in addition to any other rights or remedies that the consumer may have under State or Federal legislation.

## IMPORTANT NOTE

Our goods come with guarantees that cannot be excluded under the Australian Consumer Law. You are entitled to a replacement or refund for a major failure and compensation for any other reasonably foreseeable loss or damage. You are also entitled to have the goods repaired or replaced if the goods fail to be of acceptable quality and the failure does not amount to a major failure.